Athena 2007

Interconnection Diagram

Check Print

NASA / Jet Propulsion Laboratory Pasadena, CA				
TELEROBOTICS FIDO Rover	a Cover Sheet			
Engineer M. S. Garrett mgarrett@jpl.nasa.gov	Schematic Name Athena Interconnection Diagram			
Size A	Scale	Thursday, November 09, 2006	Rev -	Sheet 1 of 33

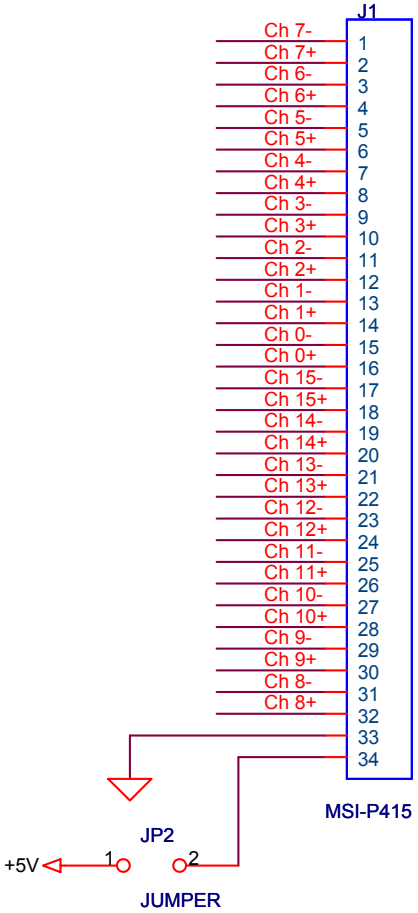

Notes:
1. Analog input is daisy chained from filter card outputs using ribbon cable.
2. Active filter card is selected at filter card using jumper.
3. Filter card output connector J2-33 and J2-34 are no connection.

Analog Input Card is MSI P415
Microcomputer Systems, Inc.
http://www.rouge.net/users/microcom/index.htm

NASA / Jet Propulsion Laboratory Pasadena, CA	
TELEROBOTICS FIDO Rover	Analog Input
Engineer M. S. Garrett mgarrett@jpl.nasa.gov	Schematic Name Athena Interconnection Diagram
Size A / Scale / Thursday, November 09, 2006 / Rev -	Sheet 2 of 33

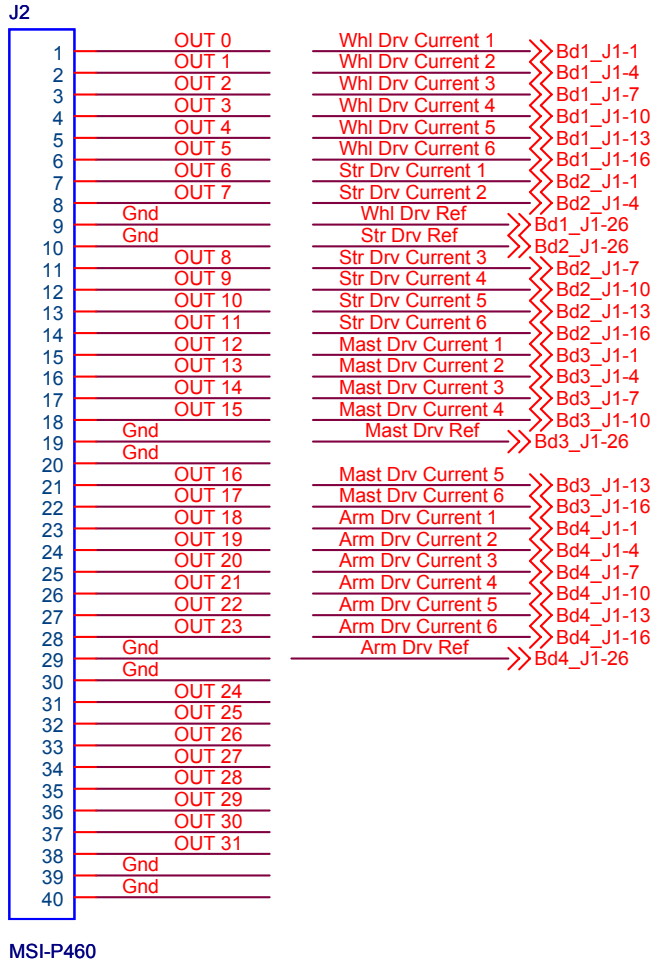


```
Analog Output Card is MSI P460
Microcomputer Systems, Inc.
http://www.rouge.net/users/microcom/index.htm
```

```
Corer    = Driver Board 5   6
Arm      = Driver Board 4   5
Mast     = Driver Board 3   4
Steering = Driver Board 2   3
Wheel    = Driver Board 1   2
                            1
```

NASA / Jet Propulsion Laboratory Pasadena, CA	
TELEROBOTICS FIDO Rover	Analog Output
Engineer M. S. Garrett mgarrett@jpl.nasa.gov	Schematic Name Athena Interconnection Diagram

Size	Scale		Rev	
A		Thursday, November 09, 2006	-	Sheet 3 of 33

Arm Bulkhead Connector

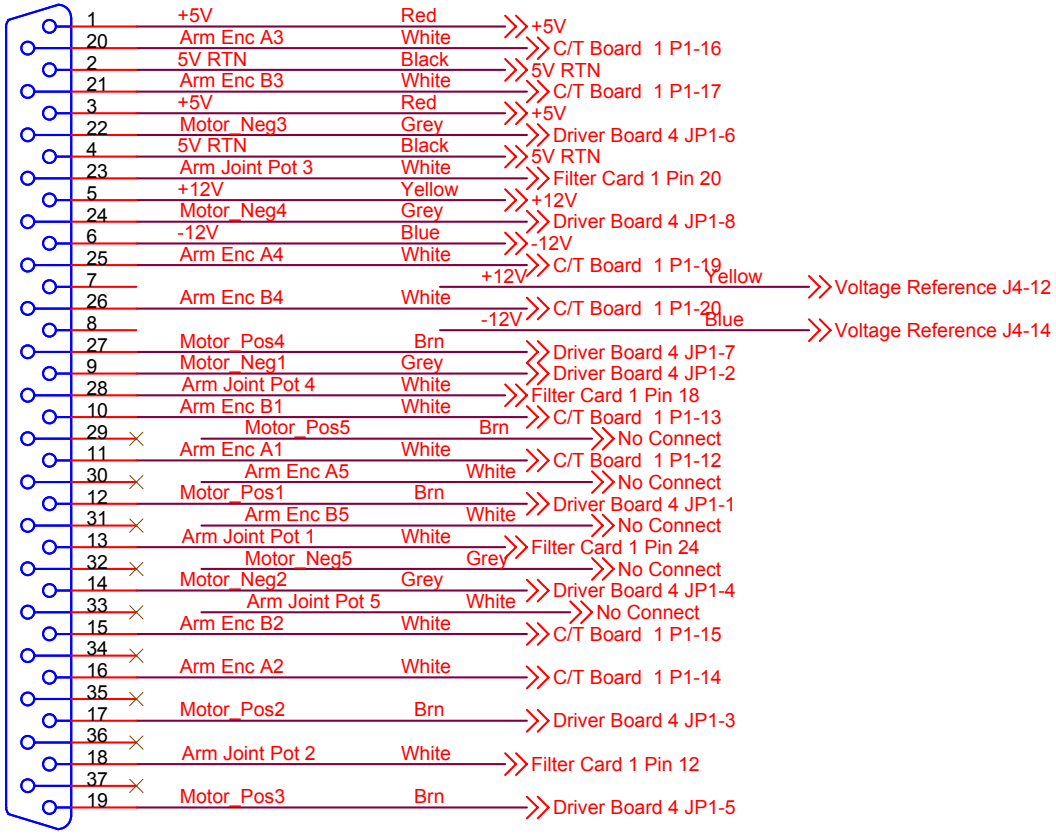

CONNECTOR DB37

(May Add Later)

- Driver Board 4 JP1-9
- C/T Board 1 P1-16
- C/T Board 1 P1-17
- Driver Board 4 JP1-10
- Filter Card 2 Pin 16
- Contact 1 — DIO Stack Bd1 J1-23
- Contact 2 — DIO Stack Bd1 J1-21
- Contact 3 — DIO Stack Bd1 J1-19
- Contact 4 — DIO Stack Bd1 J1-17

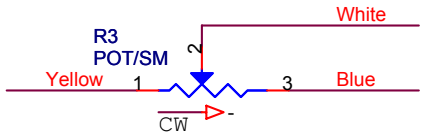

Corer	= Driver Board 5	6
Arm	= Driver Board 4	5
Mast	= Driver Board 3	4
Steering	= Driver Board 2	3
Wheel	= Driver Board 1	2
		1

NASA / Jet Propulsion Laboratory
Pasadena, CA

TELEROBOTICS FIDO Rover	Conn, Ext, Arm Actuators
Engineer M. S. Garrett mgarrett@jpl.nasa.gov	Schematic Name Athena Interconnection Diagram

Size	Scale		Rev	
A		Thursday, November 09, 2006	-	Sheet 4 of 33

Arm Bulkhead Connector

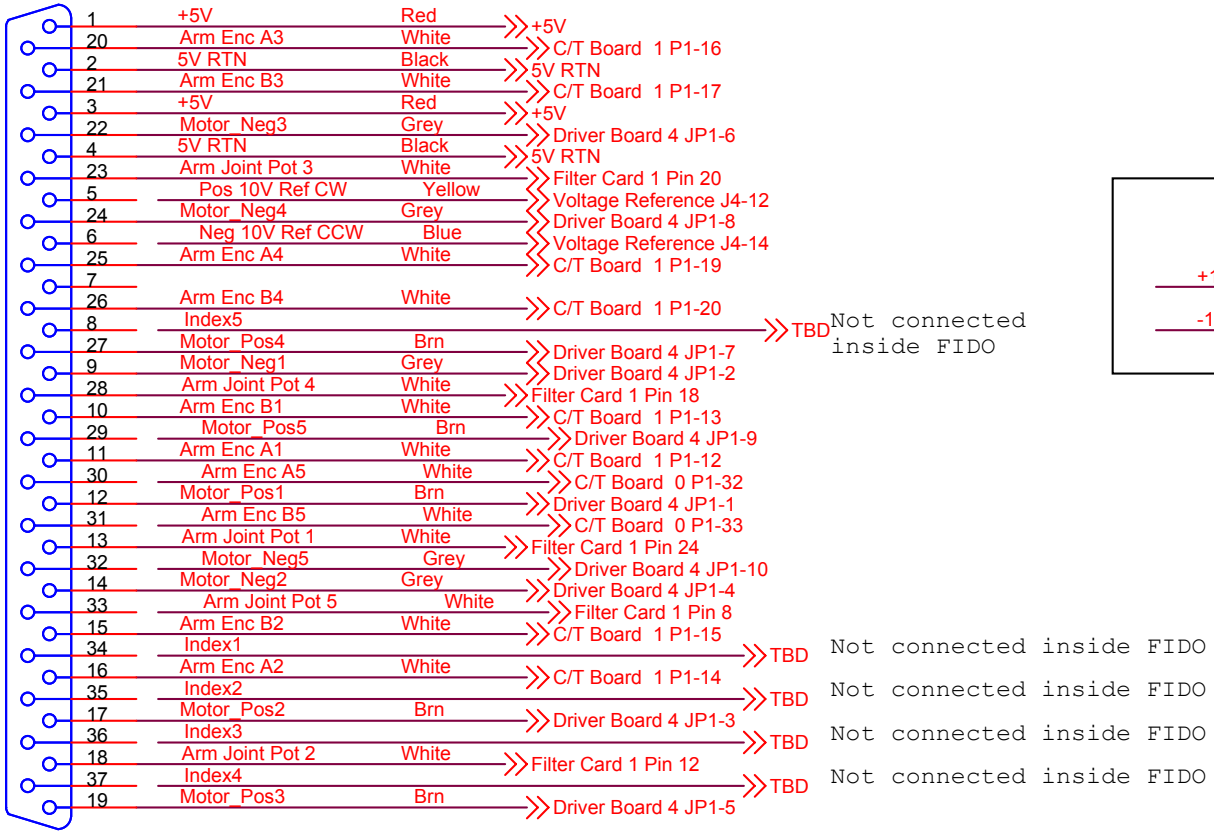

Not connected inside FIDO

Not connected inside FIDO

Not connected inside FIDO

Not connected inside FIDO

CONNECTOR DB37

Remove

+12V	Pos 10V Ref CW	Yellow	+12V
-12V	Neg 10V Ref CCW	Blue	-12V

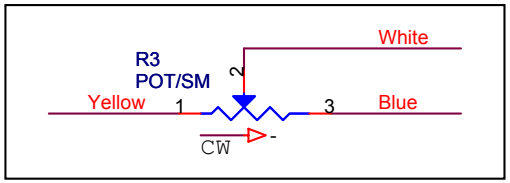

Corer	= Driver Board 5	6
Arm	= Driver Board 4	5
Mast	= Driver Board 3	4
Steering	= Driver Board 2	3
Wheel	= Driver Board 1	2
		1

NASA / Jet Propulsion Laboratory
Pasadena, CA

TELEROBOTICS FIDO Rover	Conn, Ext, Arm, Dexter
Engineer M. S. Garrett mgarrett@jpl.nasa.gov	Schematic Name Athena Interconnection Diagram

Size	Scale		Rev	
A		Thursday, November 09, 2006	-	Sheet 5 of 33

RC1 Mast Bulkhead Connector

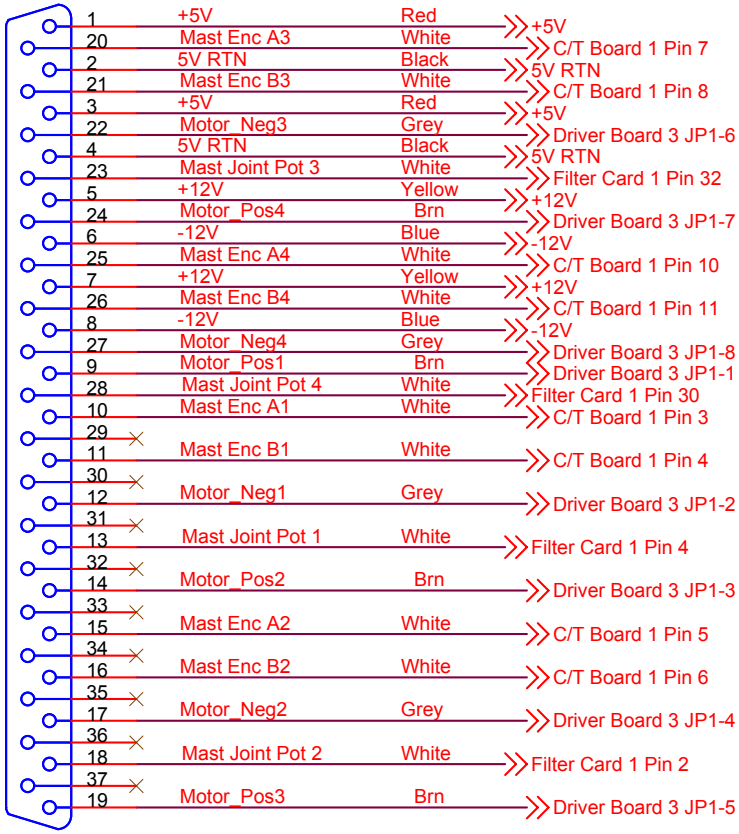

CONNECTOR DB37

```
Corer    = Driver Board 5   6
Arm      = Driver Board 4   5
Mast     = Driver Board 3   4
Steering = Driver Board 2   3
Wheel    = Driver Board 1   2
                            1
```

NASA / Jet Propulsion Laboratory Pasadena, CA	
TELEROBOTICS FIDO Rover	Conn, Ext, Mast Actuators
Engineer M. S. Garrett mgarrett@jpl.nasa.gov	Schematic Name Athena Interconnection Diagram

Size	Scale		Rev	
A		Thursday, November 09, 2006	-	Sheet 6 of 33

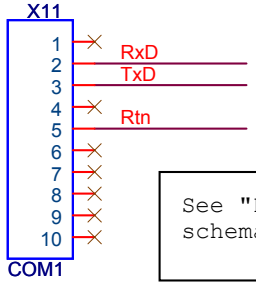

See "DMU Cable" schematic page

CPU Board is CPU-T5
E.E.P.D.
http://www.eepd.com

NASA / Jet Propulsion Laboratory Pasadena, CA	
TELEROBOTICS FIDO Rover	CPU Connections
Engineer M. S. Garrett mgarrett@jpl.nasa.gov	Schematic Name Athena Interconnection Diagram

Size	Scale		Rev	
A		Thursday, November 09, 2006	-	Sheet 7 of 33

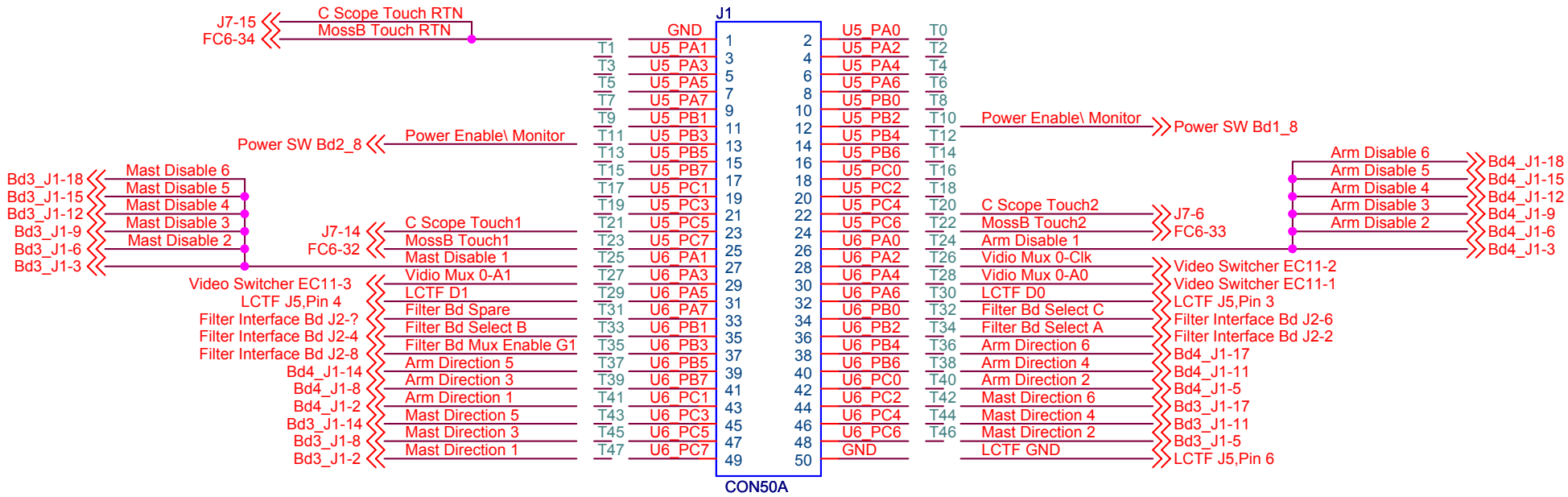


```
DIO Board is MSI P560
Microcomputer Systems, Inc.
http://www.rouge.net/users/microcom/index.htm
```

```
Corer    = Driver Board 5
Arm      = Driver Board 4
Mast     = Driver Board 3
Steering = Driver Board 2
Wheel    = Driver Board 1
```

NASA / Jet Propulsion Laboratory Pasadena, CA			
TELEROBOTICS FIDO Rover	Digital I/O Bd 1 Con J1		
Engineer M. S. Garrett mgarrett@jpl.nasa.gov	Schematic Name Athena Interconnection Diagram		
Size A	Scale	Thursday, November 09, 2006	Rev -	Sheet 8 of 33

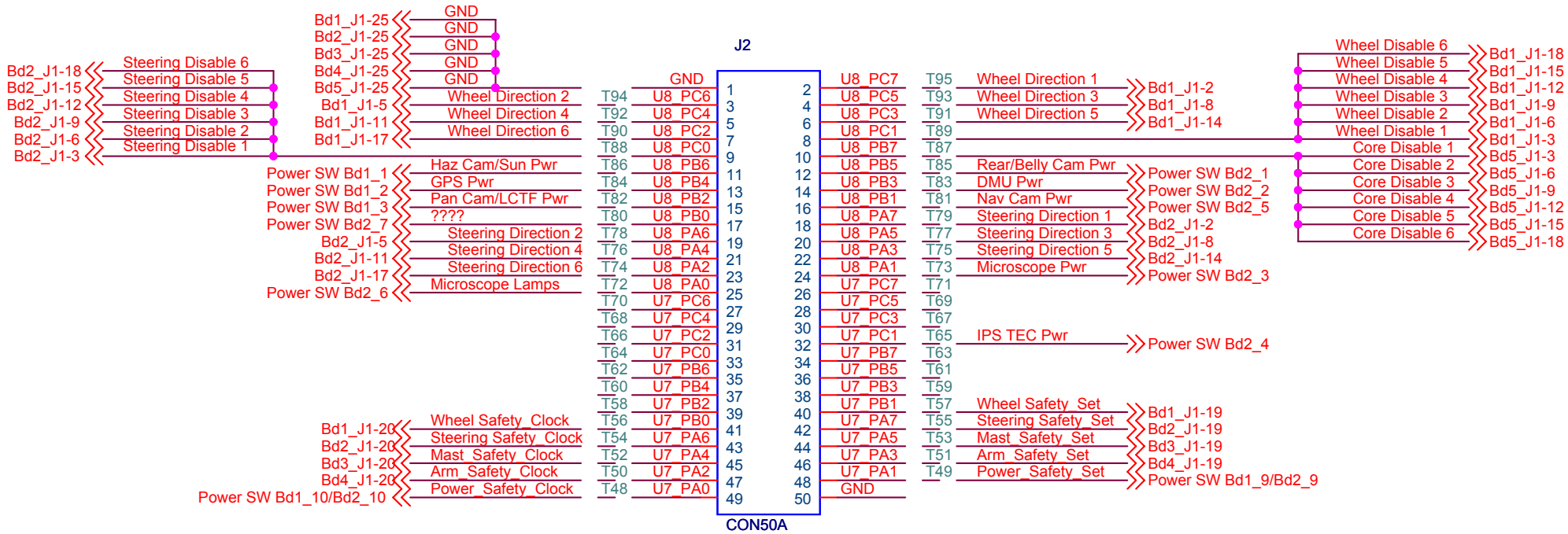


```
DIO Board is MSI P560
Microcomputer Systems, Inc.
http://www.rouge.net/users/microcom/index.htm
```

```
Corer    = Driver Board 5   6
Arm      = Driver Board 4   5
Mast     = Driver Board 3   4
Steering = Driver Board 2   3
Wheel    = Driver Board 1   2
                            1
```

NASA / Jet Propulsion Laboratory Pasadena, CA	
TELEROBOTICS FIDO Rover	Digital I/O Bd 1 Con J2
Engineer M. S. Garrett mgarrett@jpl.nasa.gov	Schematic Name Athena Interconnection Diagram

Size	Scale		Rev	
A		Thursday, November 09, 2006	-	Sheet 9 of 33

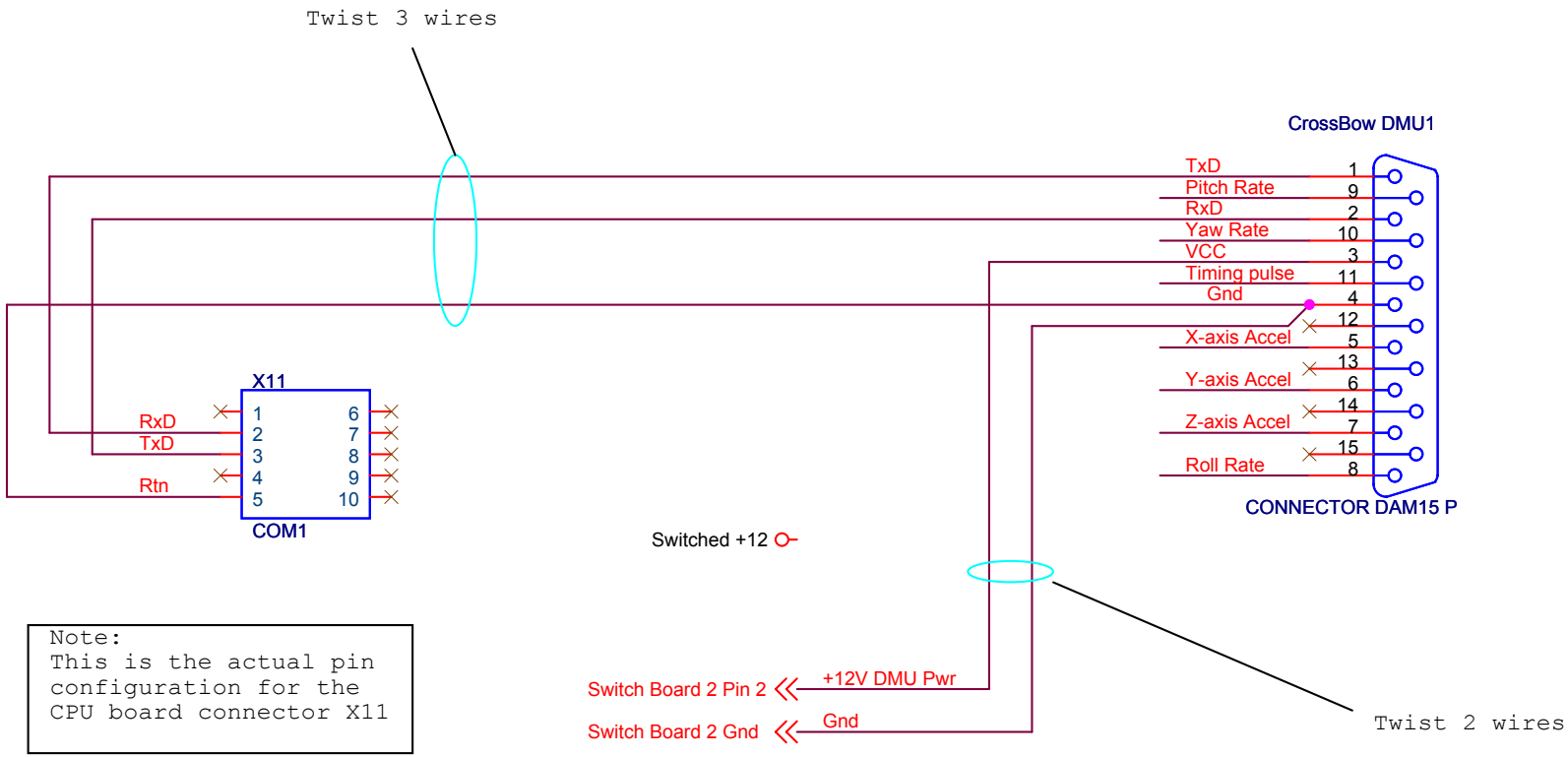

Note:
This is the actual pin configuration for the CPU board connector X11

NASA / Jet Propulsion Laboratory Pasadena, CA	
TELEROBOTICS FIDO Rover	DMU Cable CrossBow
Engineer M. S. Garrett mgarrett@jpl.nasa.gov	Schematic Name Athena Interconnection Diagram
Size A / Scale	Thursday, November 09, 2006 / Rev - / Sheet 10 of 33

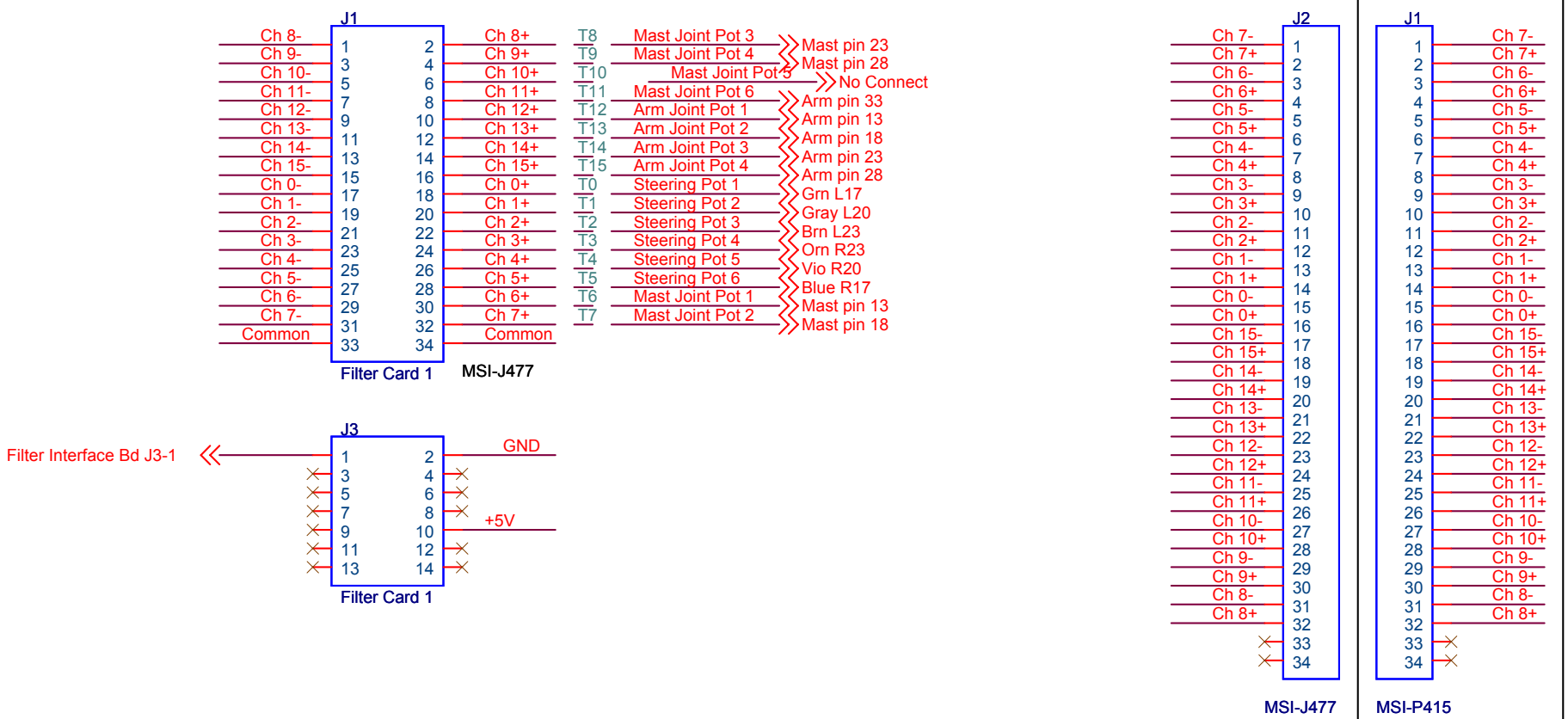

Corer	= Driver Board 5	6
Arm	= Driver Board 4	5
Mast	= Driver Board 3	4
Steering	= Driver Board 2	3
Wheel	= Driver Board 1	2
		1

Analog Filter / Multiplexer Card is MSI-J477
Microcomputer Systems, Inc.
http://www.rouge.net/users/microcom/index.htm

Notes:
Enable at all times - no jumper
Disable as default - jumper JP1-7 at all times
Control board - Select Board number using JP1
Signal +/- wires are to be twisted pair

NASA / Jet Propulsion Laboratory
Pasadena, CA

TELEROBOTICS FIDO Rover	Filter Card 1, 25 Hz
Engineer M. S. Garrett mgarrett@jpl.nasa.gov	Schematic Name FIDO Interconnection Diagram

Size	Scale		Rev	
A		Thursday, November 09, 2006	-	Sheet 11 of 33

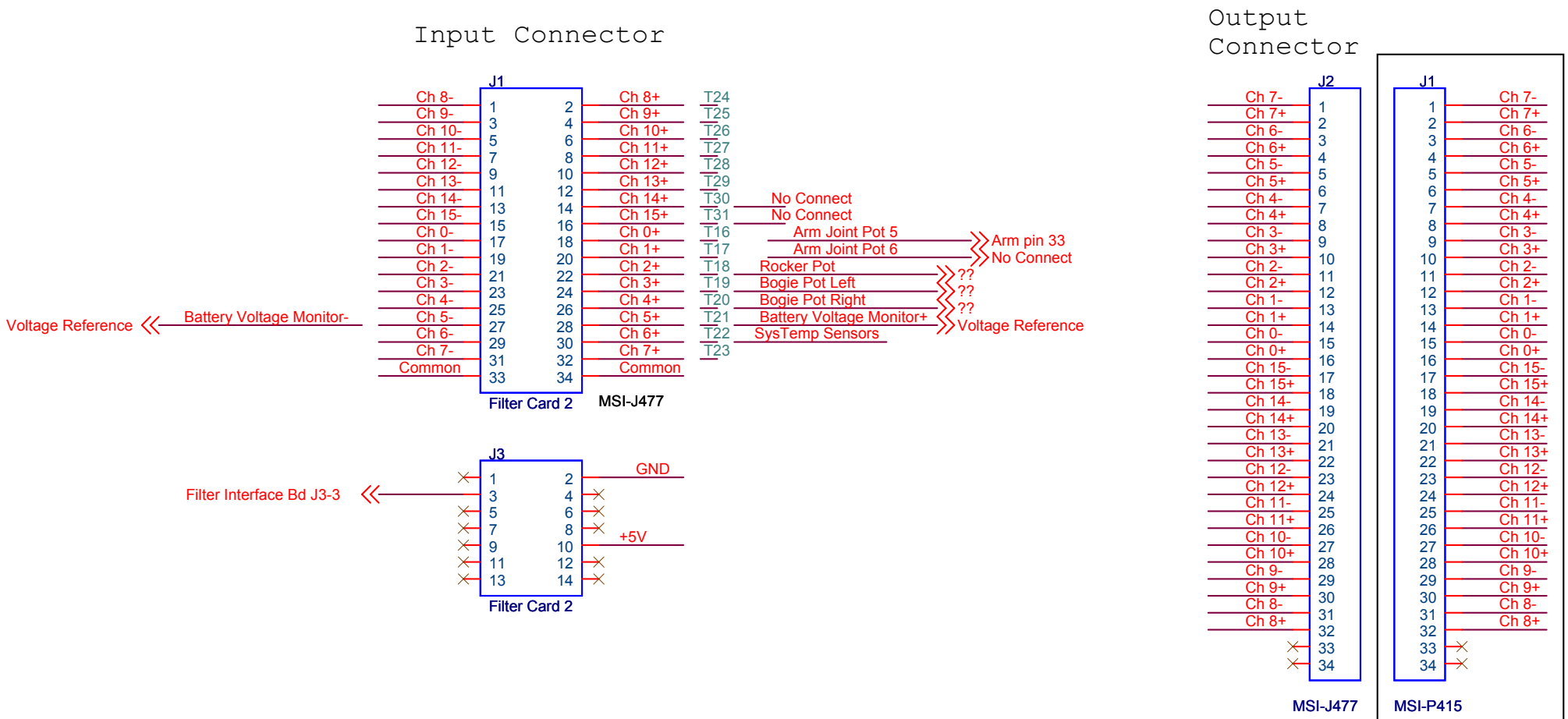


```
Corer    = Driver Board 5   6
Arm      = Driver Board 4   5
Mast     = Driver Board 3   4
Steering = Driver Board 2   3
Wheel    = Driver Board 1   2
                            1
```

```
Analog Filter / Multiplexer Card is MSI-J477
Microcomputer Systems, Inc.
http://www.rouge.net/users/microcom/index.htm
```

```
Notes:
Enable at all times - no jumper
Disable as default - jumper JP1-7 at all times
Control board - Select Board number using JP1
Signal +/- wires are to be twisted pair
```

NASA / Jet Propulsion Laboratory Pasadena, CA			
TELEROBOTICS FIDO Rover	Filter Card 2, 25 Hz		
Engineer M. S. Garrett mgarrett@jpl.nasa.gov	Schematic Name Athena Interconnection Diagram		
Size A	Scale	Thursday, November 09, 2006	Rev -	Sheet 12 of 33

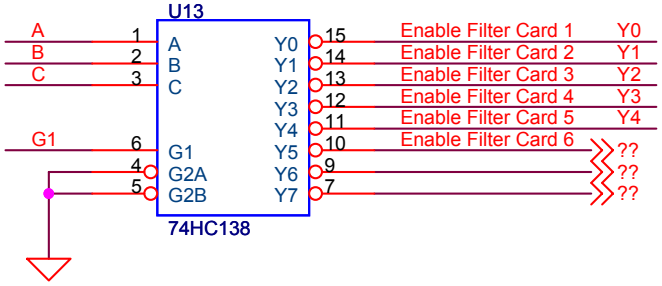

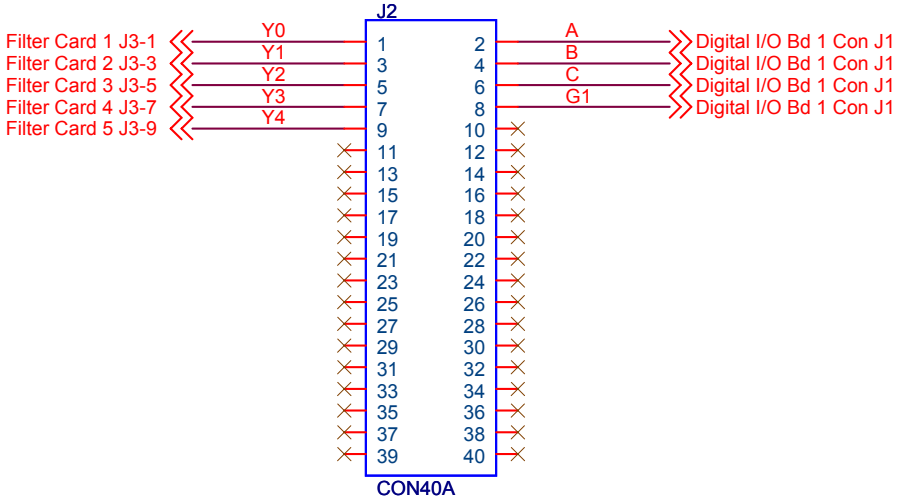

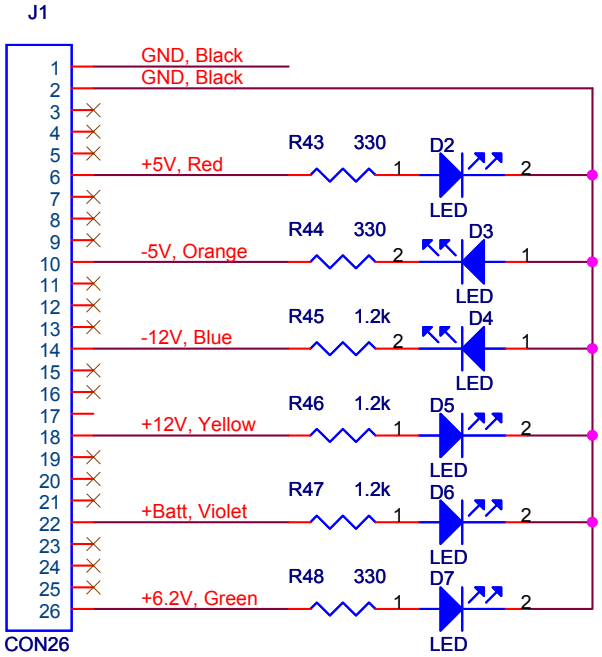

LED Carrier,
Ordered List:
-5
+5
+12
-12
+6.2
+14.4

Omit LEDs on
unused power
lines

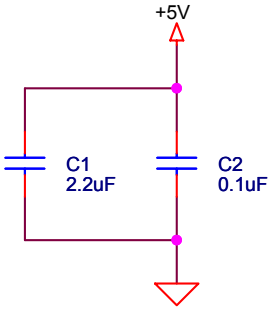

Filter Card Stack

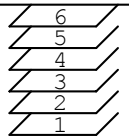

NASA / Jet Propulsion Laboratory Pasadena, CA			
TELEROBOTICS FIDO Rover	Filter Interface Board		
Engineer M. S. Garrett mgarrett@jpl.nasa.gov	Schematic Name Athena Interconnection Diagram		
Size A	Scale	Thursday, November 09, 2006	Rev -	Sheet 13 of 33

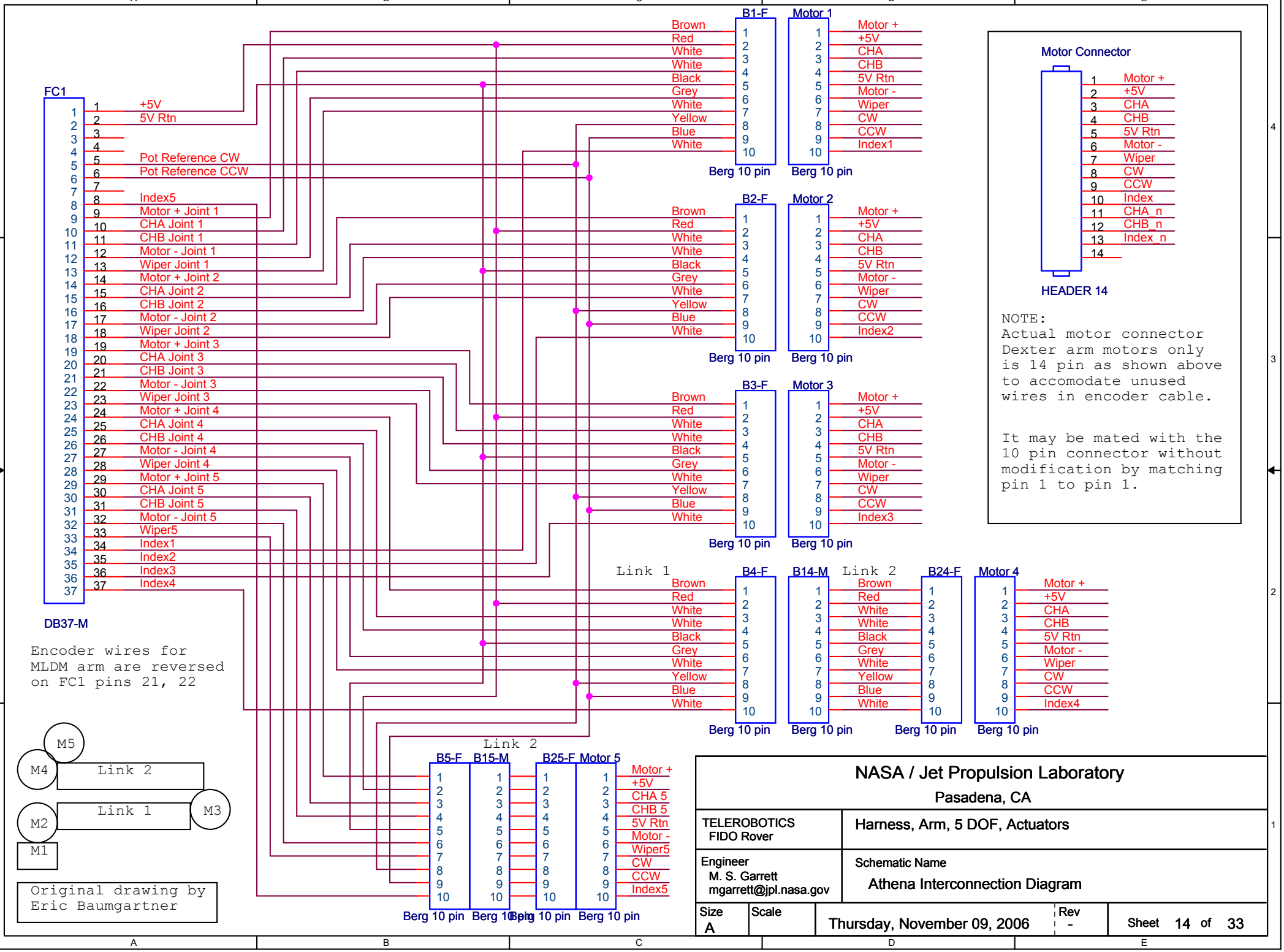
FC1
DB37-M
1 +5V
2 5V Rtn
3
4
5 Pot Reference CW
6 Pot Reference CCW
7
8 Index5
9 Motor + Joint 1
10 CHA Joint 1
11 CHB Joint 1
12 Motor - Joint 1
13 Wiper Joint 1
14 Motor + Joint 2
15 CHA Joint 2
16 CHB Joint 2
17 Motor - Joint 2
18 Wiper Joint 2
19 Motor + Joint 3
20 CHA Joint 3
21 CHB Joint 3
22 Motor - Joint 3
23 Wiper Joint 3
24 Motor + Joint 4
25 CHA Joint 4
26 CHB Joint 4
27 Motor - Joint 4
28 Wiper Joint 4
29 Motor + Joint 5
30 CHA Joint 5
31 CHB Joint 5
32 Motor - Joint 5
33 Wiper5
34 Index1
35 Index2
36 Index3
37 Index4
B1-F
Motor 1
Brown Motor +
Red +5V
White CHA
White CHB
Black 5V Rtn
Grey Motor -
White Wiper
Yellow CW
Blue CCW
White Index1
Berg 10 pin
Berg 10 pin
B2-F
Motor 2
Brown Motor +
Red +5V
White CHA
White CHB
Black 5V Rtn
Grey Motor -
White Wiper
Yellow CW
Blue CCW
White Index2
Berg 10 pin
Berg 10 pin
B3-F
Motor 3
Brown Motor +
Red +5V
White CHA
White CHB
Black 5V Rtn
Grey Motor -
White Wiper
Yellow CW
Blue CCW
White Index3
Berg 10 pin
Berg 10 pin
Link 1
B4-F
B14-M
Link 2
B24-F
Motor 4
Brown Motor +
Red +5V
White CHA
White CHB
Black 5V Rtn
Grey Motor -
White Wiper
Yellow CW
Blue CCW
White Index4
Berg 10 pin
Berg 10 pin
Berg 10 pin
Berg 10 pin
Link 2
B5-F
B15-M
B25-F
Motor 5
Motor +
+5V
CHA 5
CHB 5
5V Rtn
Motor -
Wiper5
CW
CCW
Index5
Berg 10 pin
Berg 10 pin
Berg 10 pin
Berg 10 pin
Motor Connector
1 Motor +
2 +5V
3 CHA
4 CHB
5 5V Rtn
6 Motor -
7 Wiper
8 CW
9 CCW
10 Index
11 CHA_n
12 CHB_n
13 Index_n
14
HEADER 14
NOTE:
Actual motor connector
Dexter arm motors only
is 14 pin as shown above
to accomodate unused
wires in encoder cable.
It may be mated with the
10 pin connector without
modification by matching
pin 1 to pin 1.
Encoder wires for
MLDM arm are reversed
on FC1 pins 21, 22
M5
M4
Link 2
Link 1
M3
M2
M1
Original drawing by
Eric Baumgartner
NASA / Jet Propulsion Laboratory
Pasadena, CA
TELEROBOTICS
FIDO Rover
Harness, Arm, 5 DOF, Actuators
Engineer
M. S. Garrett
mgarrett@jpl.nasa.gov
Schematic Name
Athena Interconnection Diagram
Size
A
Scale
Thursday, November 09, 2006
Rev
-
Sheet 14 of 33

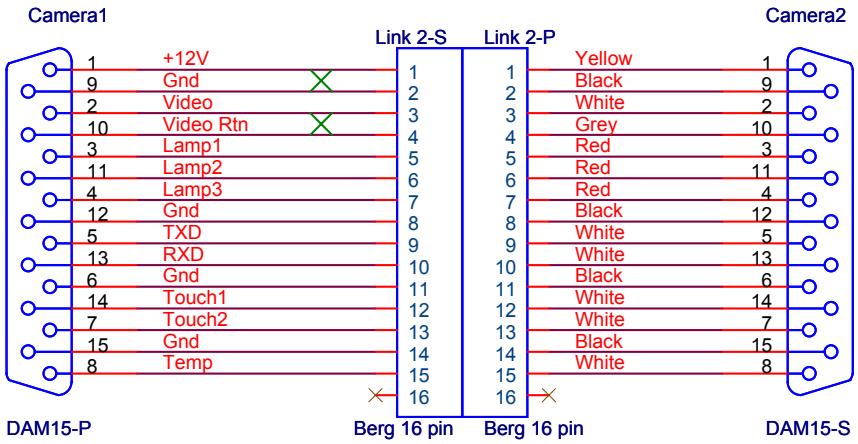

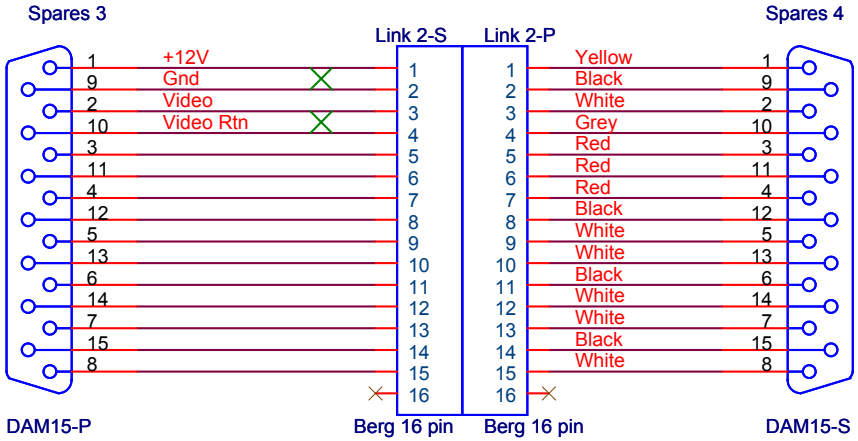

NASA / Jet Propulsion Laboratory Pasadena, CA	
TELEROBOTICS FIDO Rover	Harness, End Effector
Engineer M. S. Garrett mgarrett@jpl.nasa.gov	Schematic Name Athena Interconnection Diagram
Size A / Scale / Thursday, November 09, 2006 / Rev -	Sheet 15 of 33

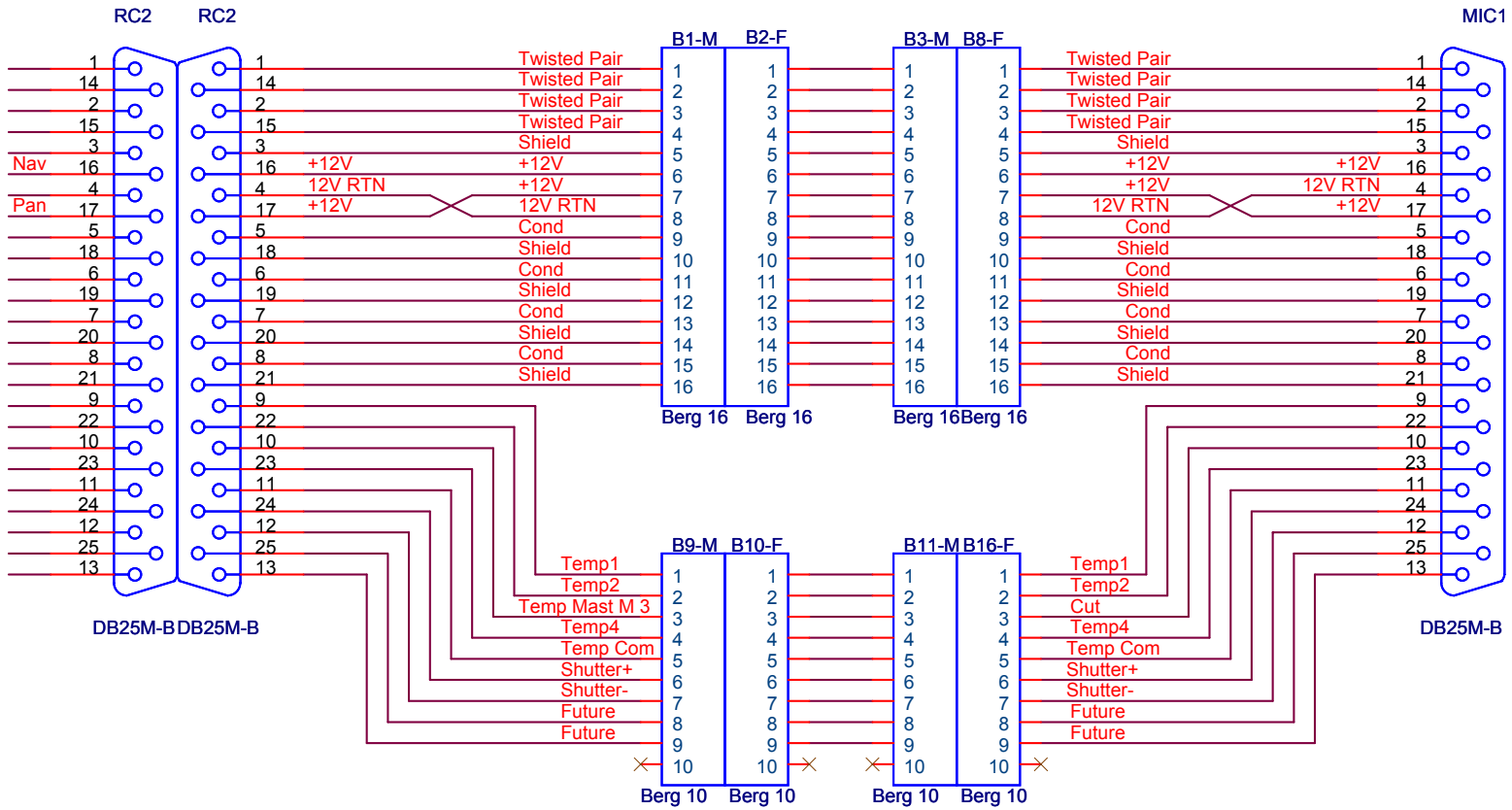

Original drawing by
Eric Baumgartner

NASA / Jet Propulsion Laboratory Pasadena, CA			
TELEROBOTICS FIDO Rover	Harness, Instrument Head Fixed		
Engineer M. S. Garrett mgarrett@jpl.nasa.gov	Schematic Name Athena Interconnection Diagram		
Size A	Scale	Thursday, November 09, 2006	Rev -	Sheet 16 of 33

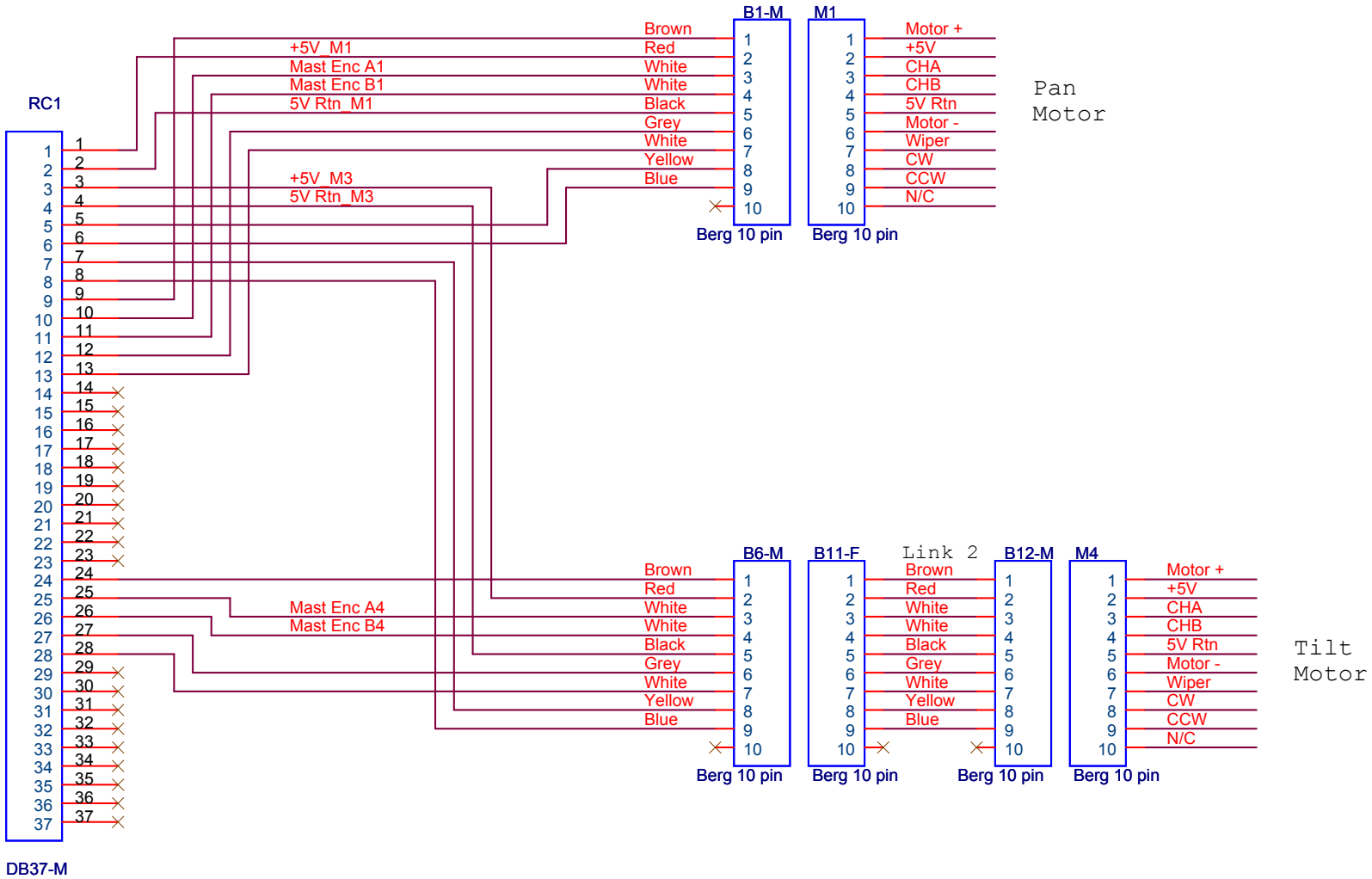

NASA / Jet Propulsion Laboratory Pasadena, CA				
TELEROBOTICS FIDO Rover	Harness, Mast Actuator Fixed			
Engineer M. S. Garrett mgarrett@jpl.nasa.gov	Schematic Name Athena Interconnection Diagram			
Size A	Scale	Thursday, November 09, 2006	Rev -	Sheet 17 of 33

Athena Cameras and cables TBD

NASA / Jet Propulsion Laboratory Pasadena, CA				
TELEROBOTICS FIDO Rover	Harness, Sensors Front			
Engineer M. S. Garrett mgarrett@jpl.nasa.gov	Schematic Name Athena Interconnection Diagram			
Size A	Scale	Thursday, November 09, 2006	Rev -	Sheet 18 of 33

Athena Cameras and cables TBD

NASA / Jet Propulsion Laboratory Pasadena, CA	
TELEROBOTICS FIDO Rover	Harness, Sensors Rear
Engineer M. S. Garrett mgarrett@jpl.nasa.gov	Schematic Name Athena Interconnection Diagram

Size	Scale		Rev	
A		Thursday, November 09, 2006	-	Sheet 19 of 33

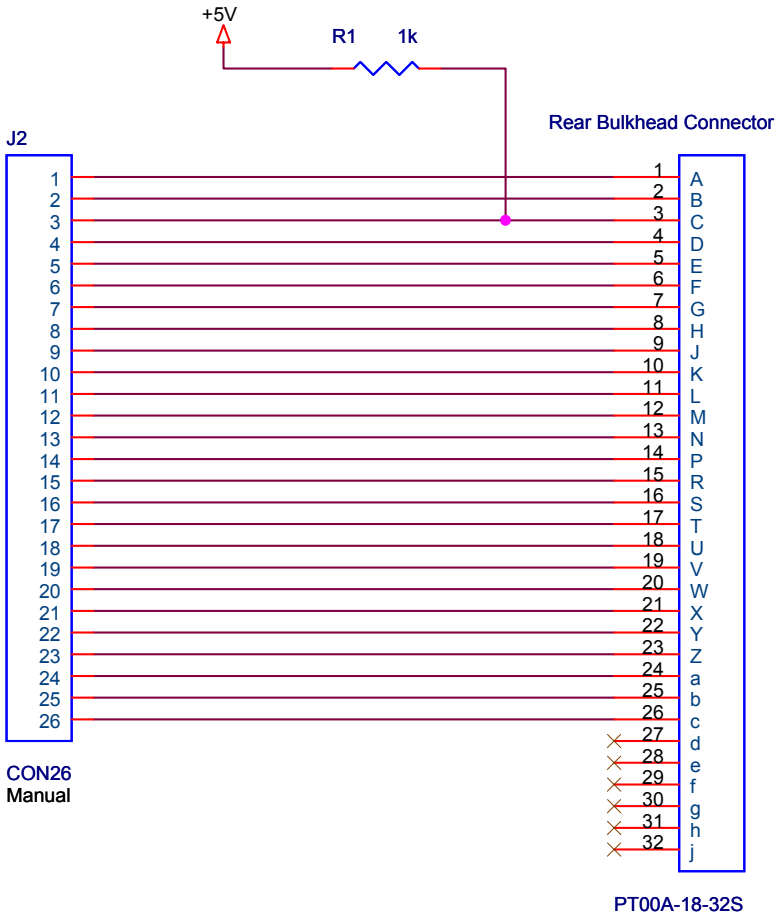

NASA / Jet Propulsion Laboratory Pasadena, CA	
TELEROBOTICS FIDO Rover	Manual Control Cable
Engineer M. S. Garrett mgarrett@jpl.nasa.gov	Schematic Name Athena Interconnection Diagram
Size A	Scale
Thursday, November 09, 2006	Rev -
Sheet 20 of 33	

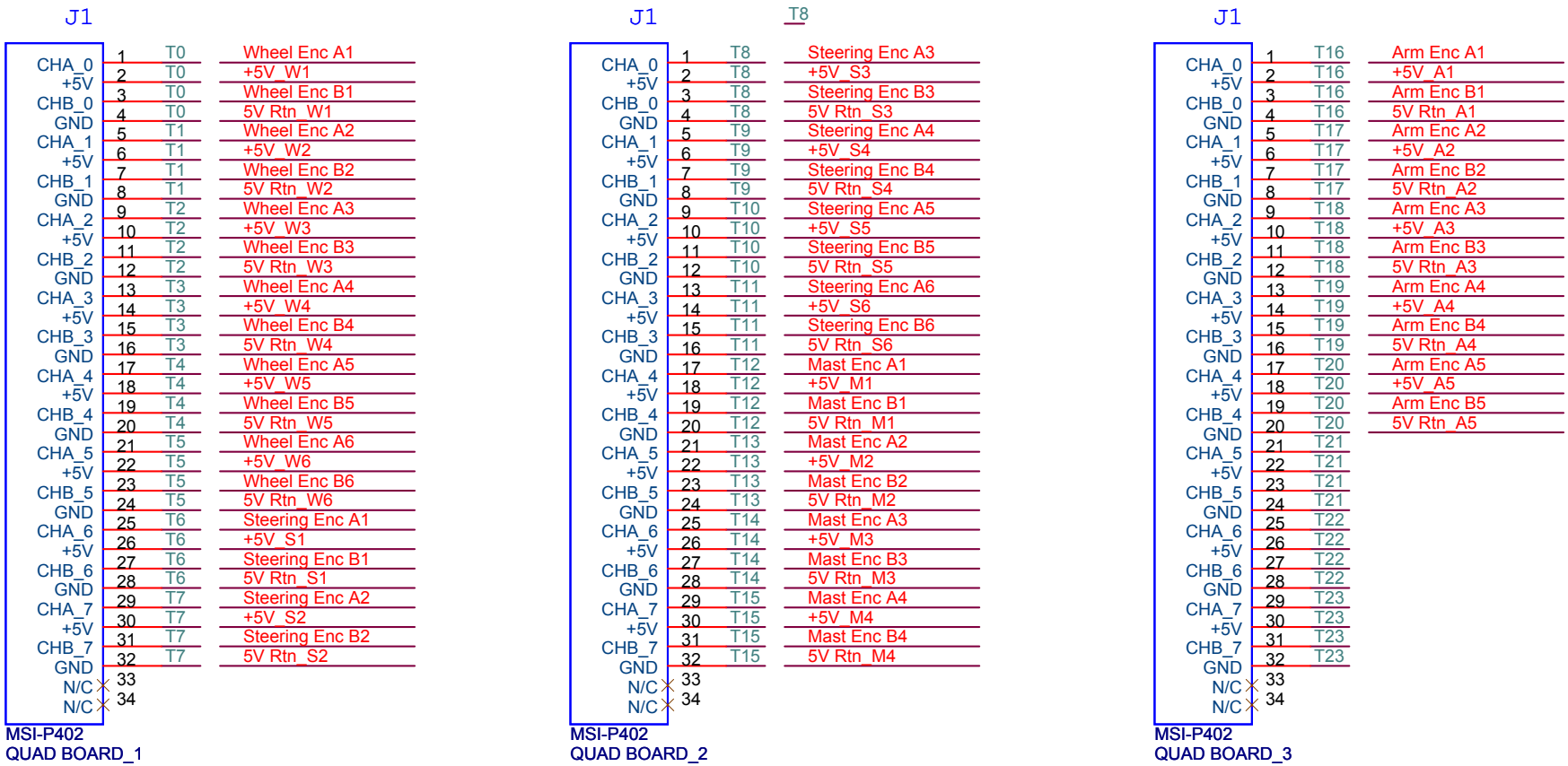


```
Corer    = Driver Board 5   6
Arm      = Driver Board 4   5
Mast     = Driver Board 3   4
Steering = Driver Board 2   3
Wheel    = Driver Board 1   2
                            1
```

```
Quadrature Decoder Card is MSI-P400
Microcomputer Systems, Inc.
http://www.rouge.net/users/microcom/index.htm
```

NASA / Jet Propulsion Laboratory Pasadena, CA	
TELEROBOTICS FIDO Rover	Motor Decoder Boards
Engineer M. S. Garrett mgarrett@jpl.nasa.gov	Schematic Name Athena Interconnection Diagram
Size A / Scale	Thursday, November 09, 2006 / Rev - / Sheet 21 of 33

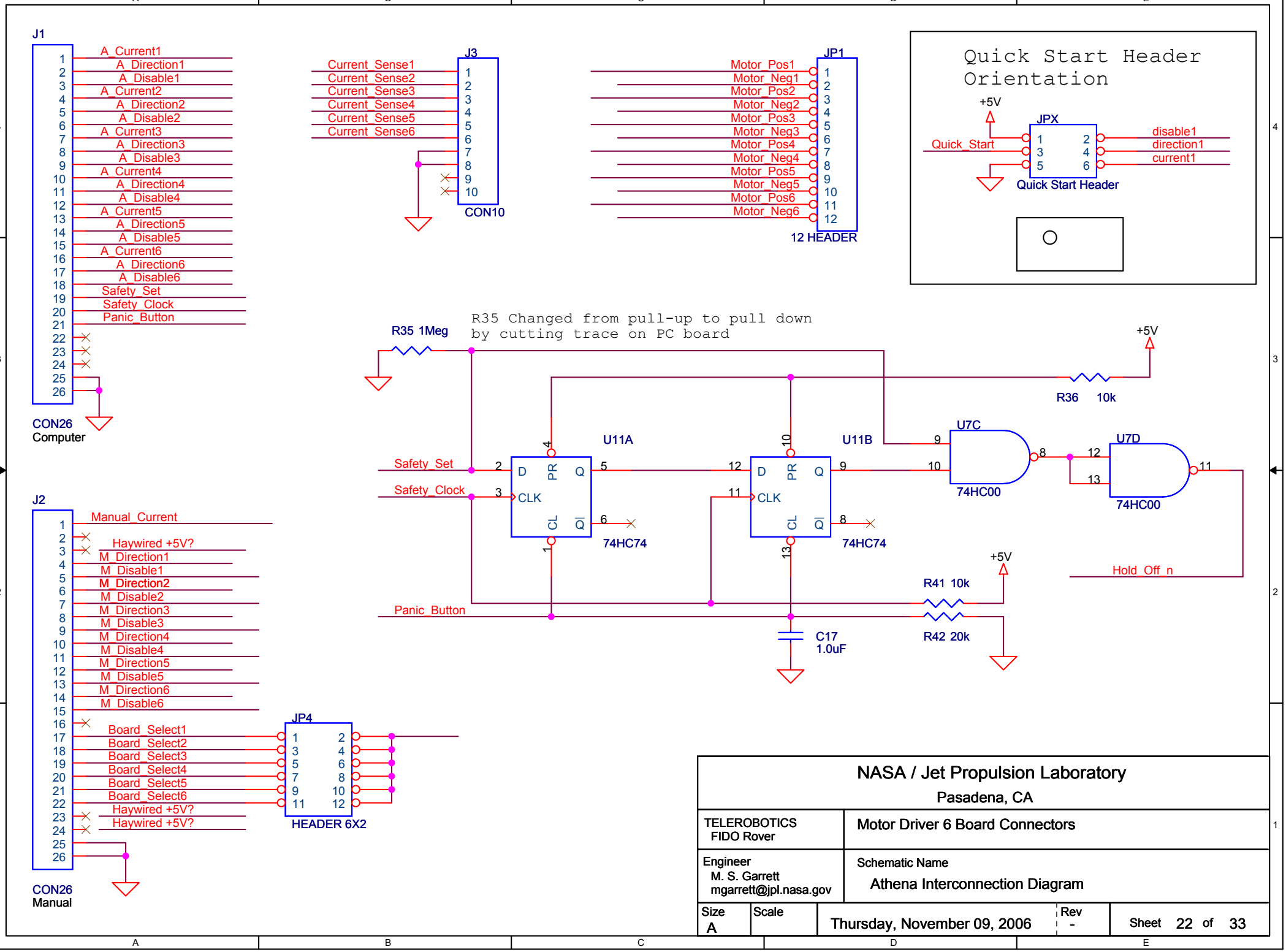
J1
A_Current1
A_Direction1
A_Disable1
A_Current2
A_Direction2
A_Disable2
A_Current3
A_Direction3
A_Disable3
A_Current4
A_Direction4
A_Disable4
A_Current5
A_Direction5
A_Disable5
A_Current6
A_Direction6
A_Disable6
Safety_Set
Safety_Clock
Panic_Button
CON26
Computer
J3
Current_Sense1
Current_Sense2
Current_Sense3
Current_Sense4
Current_Sense5
Current_Sense6
CON10
JP1
Motor_Pos1
Motor_Neg1
Motor_Pos2
Motor_Neg2
Motor_Pos3
Motor_Neg3
Motor_Pos4
Motor_Neg4
Motor_Pos5
Motor_Neg5
Motor_Pos6
Motor_Neg6
12 HEADER
Quick Start Header Orientation
+5V
JPX
Quick_Start
disable1
direction1
current1
Quick Start Header
R35 1Meg
R35 Changed from pull-up to pull down by cutting trace on PC board
+5V
R36 10k
U11A
U11B
U7C
U7D
Safety_Set
Safety_Clock
D
CLK
PR
CL
Q
Q̄
74HC74
74HC00
Hold_Off_n
R41 10k
R42 20k
C17
1.0uF
Panic_Button
J2
Manual_Current
Haywired +5V?
M_Direction1
M_Disable1
M_Direction2
M_Disable2
M_Direction3
M_Disable3
M_Direction4
M_Disable4
M_Direction5
M_Disable5
M_Direction6
M_Disable6
Board_Select1
Board_Select2
Board_Select3
Board_Select4
Board_Select5
Board_Select6
Haywired +5V?
Haywired +5V?
CON26
Manual
JP4
HEADER 6X2
NASA / Jet Propulsion Laboratory
Pasadena, CA
TELEROBOTICS
FIDO Rover
Motor Driver 6 Board Connectors
Engineer
M. S. Garrett
mgarrett@jpl.nasa.gov
Schematic Name
Athena Interconnection Diagram
Size
A
Scale
Thursday, November 09, 2006
Rev
-
Sheet 22 of 33

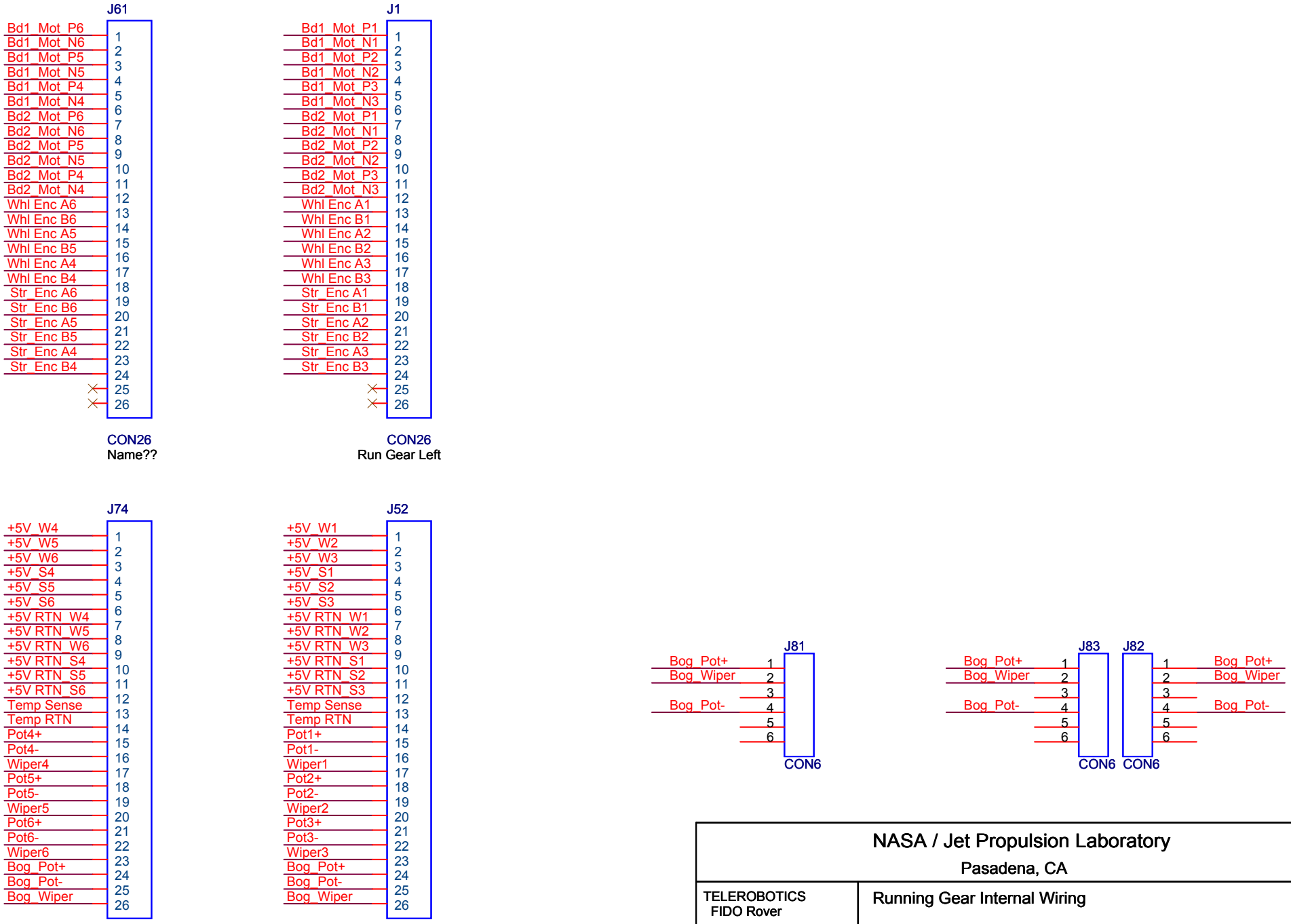

NASA / Jet Propulsion Laboratory
Pasadena, CA

TELEROBOTICS FIDO Rover	Running Gear Internal Wiring
Engineer M. S. Garrett mgarrett@jpl.nasa.gov	Schematic Name Athena Interconnection Diagram

Size	Scale		Rev	
A		Thursday, November 09, 2006	-	Sheet 23 of 33

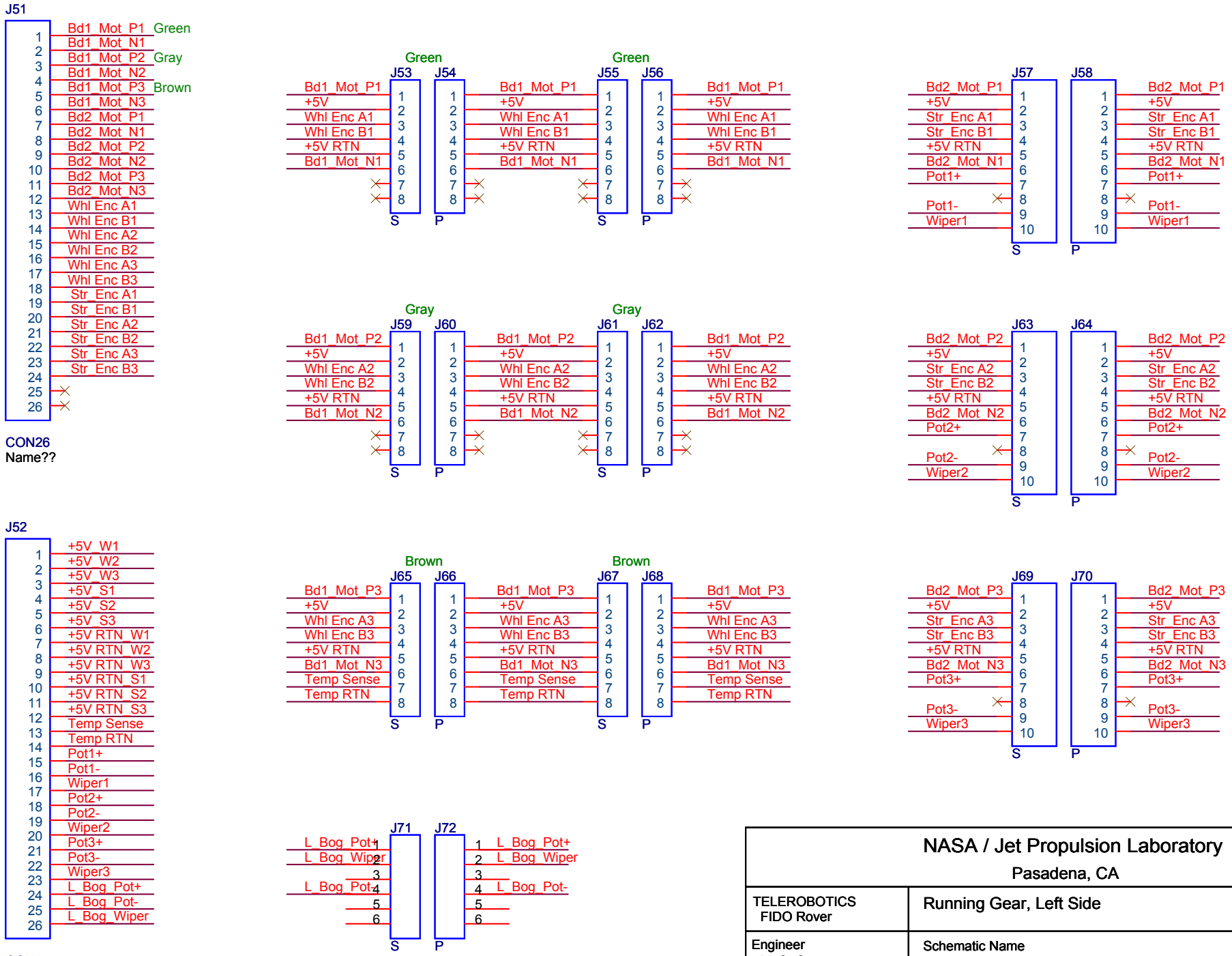

NASA / Jet Propulsion Laboratory Pasadena, CA			
TELEROBOTICS FIDO Rover	Running Gear, Left Side		
Engineer M. S. Garrett mgarrett@jpl.nasa.gov	Schematic Name Athena Interconnection Diagram		
Size A	Scale	Thursday, November 09, 2006	Rev -	Sheet 24 of 33

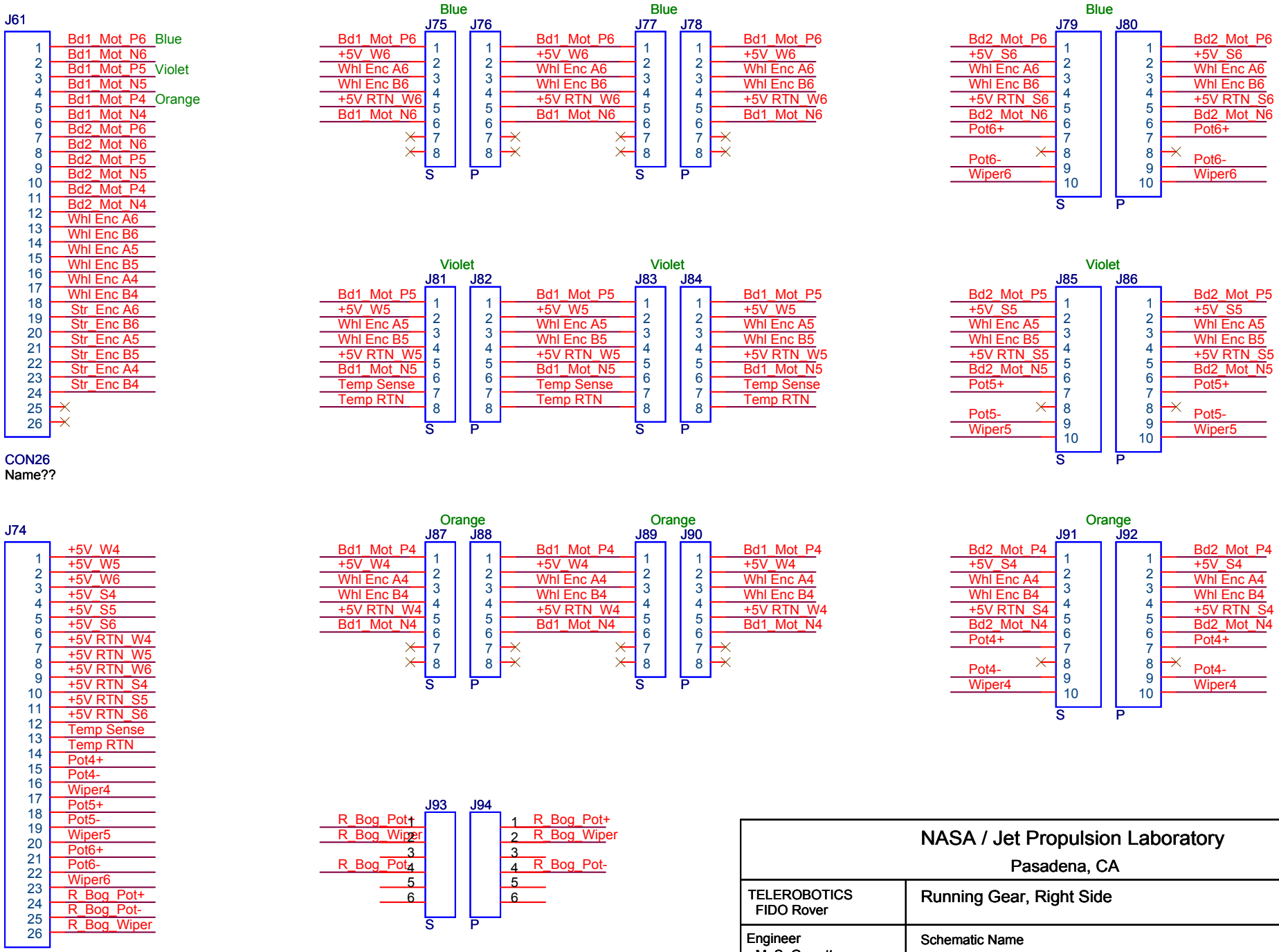

NASA / Jet Propulsion Laboratory
Pasadena, CA

TELEROBOTICS FIDO Rover	Running Gear, Right Side
Engineer M. S. Garrett mgarrett@jpl.nasa.gov	Schematic Name Athena Interconnection Diagram

Size	Scale		Rev	
A		Thursday, November 09, 2006	-	Sheet 25 of 33

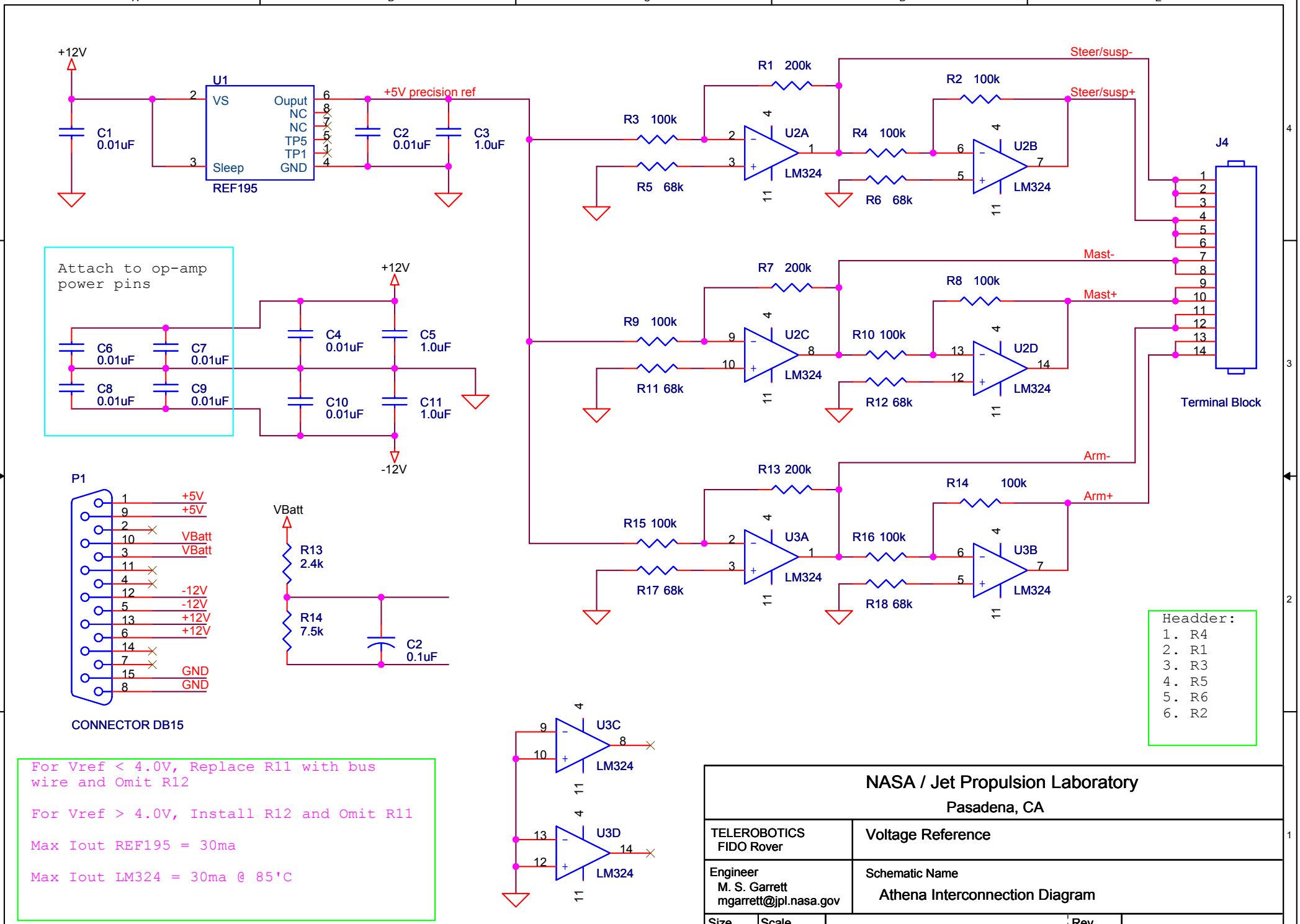
+12V
U1
VS
Sleep
Ouput
NC
NC
TP5
TP1
GND
REF195
C1 0.01uF
C2 0.01uF
C3 1.0uF
+5V precision ref
R1 200k
R2 100k
R3 100k
R4 100k
R5 68k
R6 68k
U2A
U2B
LM324
Steer/susp-
Steer/susp+
J4
Terminal Block
Attach to op-amp power pins
C6 0.01uF
C7 0.01uF
C8 0.01uF
C9 0.01uF
C4 0.01uF
C5 1.0uF
C10 0.01uF
C11 1.0uF
-12V
R7 200k
R8 100k
R9 100k
R10 100k
R11 68k
R12 68k
U2C
U2D
Mast-
Mast+
P1
+5V
VBatt
-12V
+12V
GND
CONNECTOR DB15
VBatt
R13 2.4k
R14 7.5k
C2 0.1uF
R13 200k
R14 100k
R15 100k
R16 100k
R17 68k
R18 68k
U3A
U3B
Arm-
Arm+
Headder:
1. R4
2. R1
3. R3
4. R5
5. R6
6. R2
U3C
U3D
For Vref < 4.0V, Replace R11 with bus wire and Omit R12
For Vref > 4.0V, Install R12 and Omit R11
Max Iout REF195 = 30ma
Max Iout LM324 = 30ma @ 85'C
NASA / Jet Propulsion Laboratory
Pasadena, CA
TELEROBOTICS
FIDO Rover
Voltage Reference
Engineer
M. S. Garrett
mgarrett@jpl.nasa.gov
Schematic Name
Athena Interconnection Diagram
Size
A
Scale
Thursday, November 09, 2006
Rev
-
Sheet 26 of 33

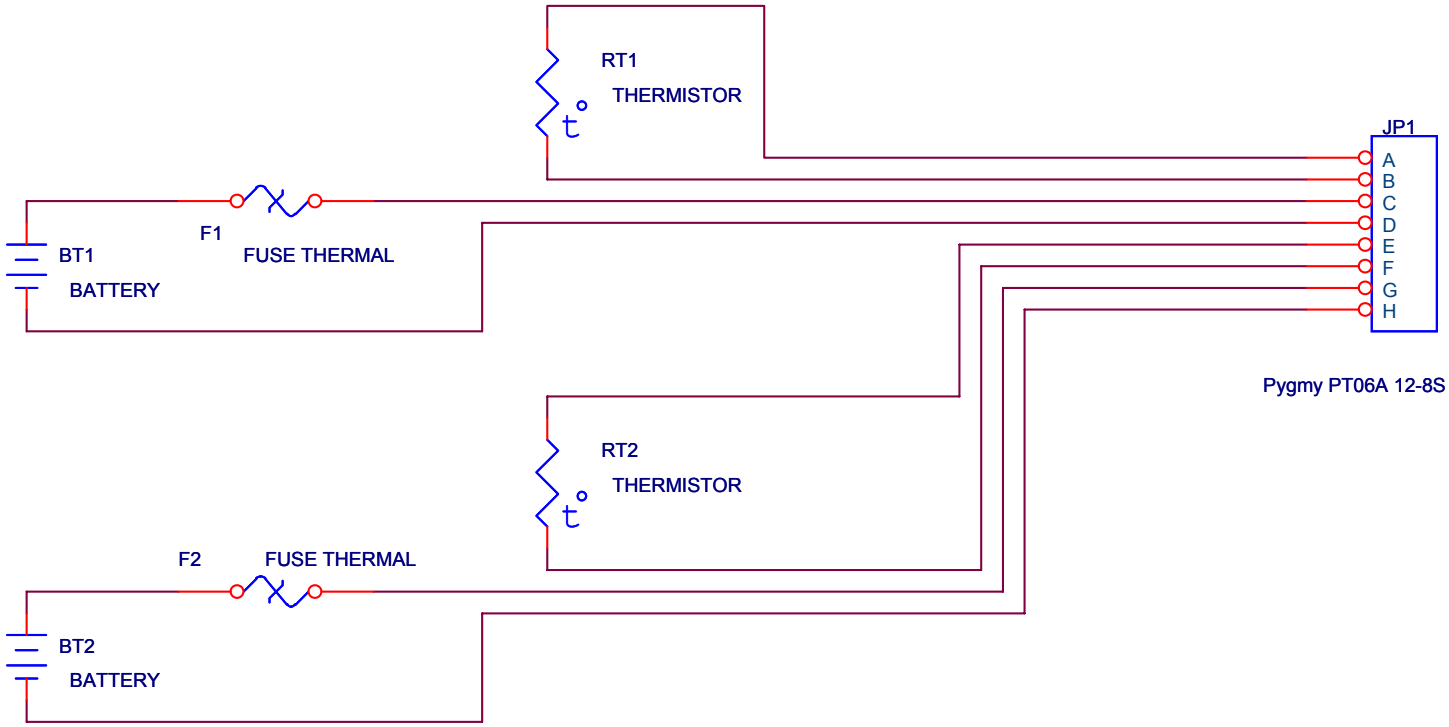

NASA / Jet Propulsion Laboratory Pasadena, CA				
TELEROBOTICS ET / FIDO Rover	Power System			
Engineer M. S. Garrett mgarrett@jpl.nasa.gov	Schematic Name Battery Pack			
Size A	Scale	Thursday, November 09, 2006	Rev -	Sheet 27 of 33

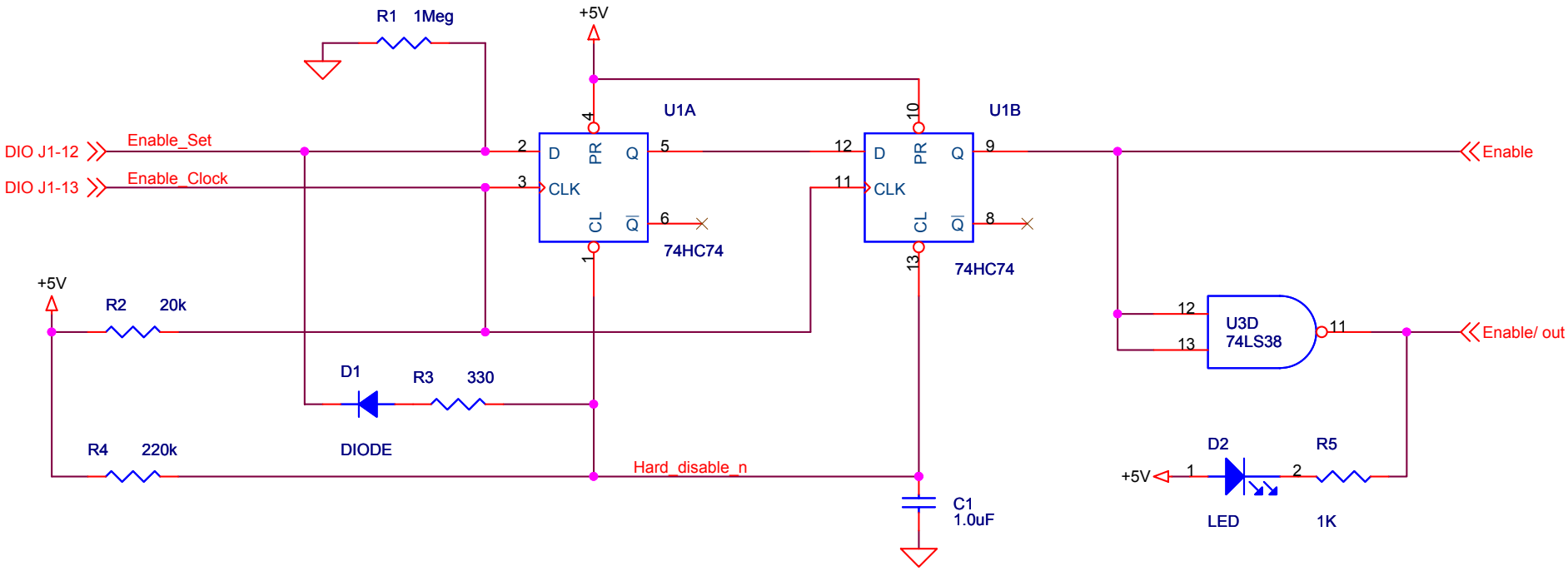

NASA / Jet Propulsion Laboratory Pasadena, CA	
TELEROBOTICS ET / FIDO Rover	Power System
Engineer M. S. Garrett mgarrett@jpl.nasa.gov	Schematic Name Hold off circuit
Size A	Scale
Thursday, November 09, 2006	Rev -
Sheet 28 of 33	

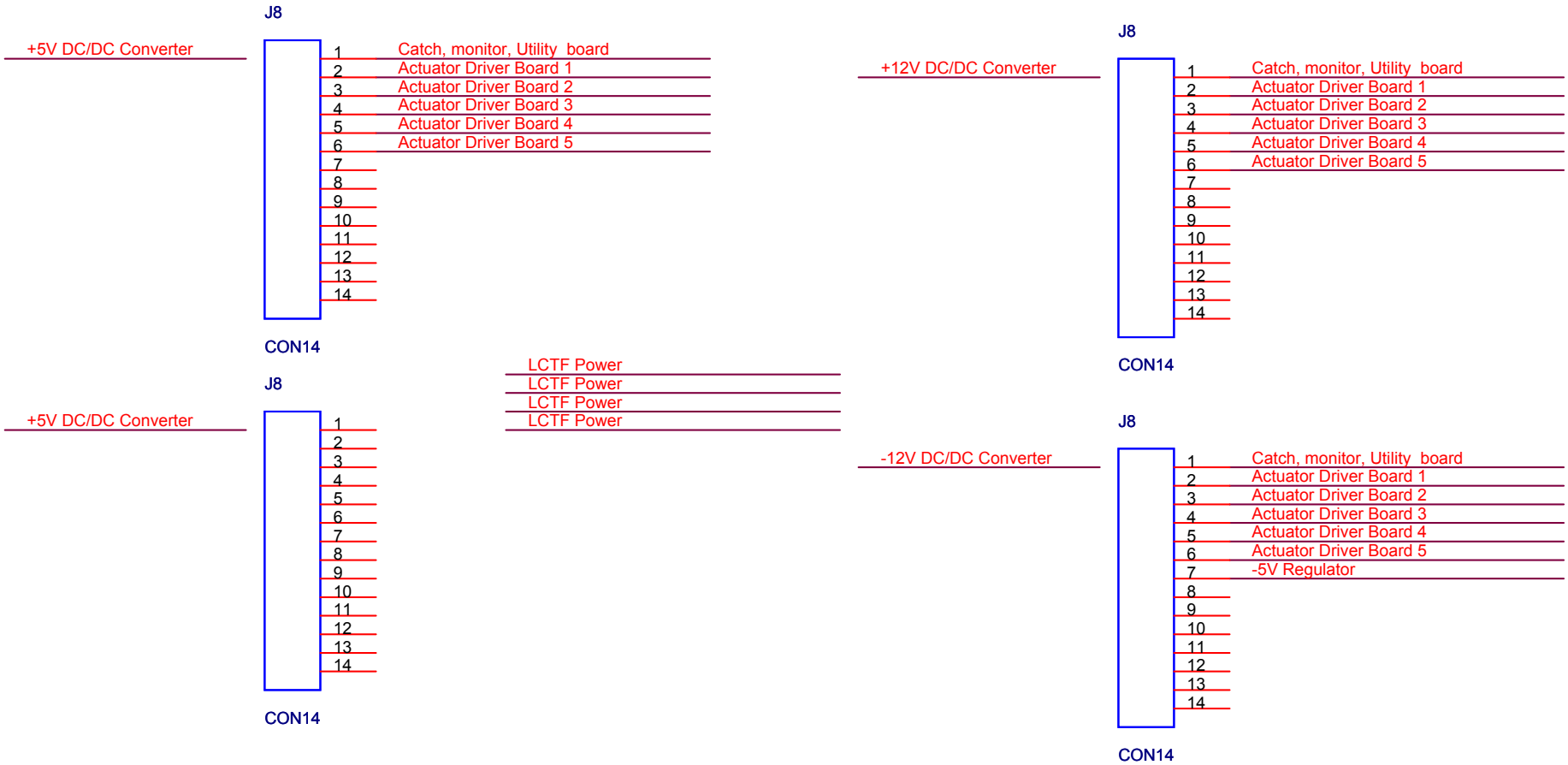

PC 104 Power Converter
+5V DC/DC Converter
+12V DC/DC Converter
-12V DC/DC Converter
+6.2V DC/DC Converter
Actuator Driver Board 1
Actuator Driver Board 2
Actuator Driver Board 3
Actuator Driver Board 4
Actuator Driver Board 5
Catch, monitor, Utility board

+6.2V DC/DC Converter

Catch, monitor, Utility board

NASA / Jet Propulsion Laboratory Pasadena, CA				
TELEROBOTICS ET / FIDO Rover	Power System			
Engineer M. S. Garrett mgarrett@jpl.nasa.gov	Schematic Name Regulated Power Busses			
Size A	Scale	Thursday, November 09, 2006	Rev -	Sheet 29 of 33

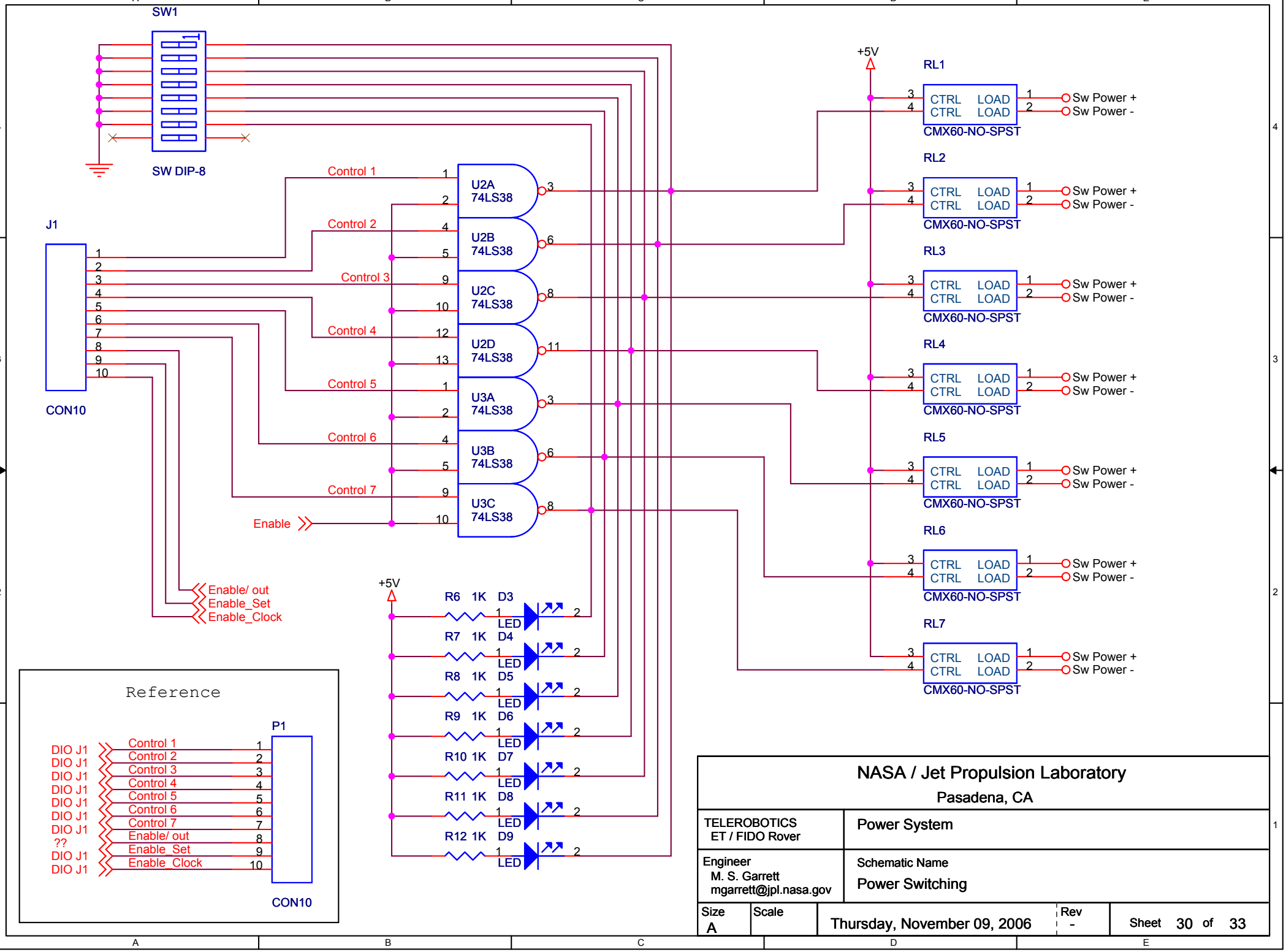
SW1
SW DIP-8
J1
CON10
Control 1
Control 2
Control 3
Control 4
Control 5
Control 6
Control 7
Enable
U2A 74LS38
U2B 74LS38
U2C 74LS38
U2D 74LS38
U3A 74LS38
U3B 74LS38
U3C 74LS38
Enable/ out
Enable_Set
Enable_Clock
+5V
R6 1K D3
R7 1K D4
R8 1K D5
R9 1K D6
R10 1K D7
R11 1K D8
R12 1K D9
LED
RL1
RL2
RL3
RL4
RL5
RL6
RL7
CTRL LOAD
CMX60-NO-SPST
Sw Power +
Sw Power -
Reference
P1
DIO J1
??
Control 1
Control 2
Control 3
Control 4
Control 5
Control 6
Control 7
Enable/ out
Enable_Set
Enable_Clock
CON10
NASA / Jet Propulsion Laboratory
Pasadena, CA
TELEROBOTICS
ET / FIDO Rover
Power System
Engineer
M. S. Garrett
mgarrett@jpl.nasa.gov
Schematic Name
Power Switching
Size
A
Scale
Thursday, November 09, 2006
Rev
-
Sheet 30 of 33

FIDO 2001 Index Page

1. Analog Input
2. Analog Output
3. Conn, Ext, Arm Actuators
4. Conn, Ext, Mast Actuators
5. Conn, Ext, Mini-Corer
6. CPU Connections
7. Digital I/O Bd 1 Con J1
8. Digital I/O Bd 1 Con J2
9. DMU Cable
10. Filter Card 1
11. Filter Card 2
12. Filter Card 3
13. Filter Card 4
14. Filter Card 5
15. Filter Interface Board
16. Harness, Arm Actuator
17. Harness, Arm End Effector
18. Harness, Instrument Head
19. Harness, Mast Actuator
20. Harness, Sensors Front
21. Harness, Sensors Rear
22. Internal Wiring to Running Gear
23. Manual Control Cable
24. Motor Decoder Boards
25. Motor Driver 6 Board Connectors
26. Power Connector to IPS
27. Power Converter 6.2V
28. Power Switching
29. Running Gear, Left Side
30. Running Gear, Right Side
31. Video Frame Grabbers
32. Video Switcher
33. Voltage Reference
34. z Cover Sheet
35. z Index
36. z Notes Page
37. z Work Area

NASA / Jet Propulsion Laboratory Pasadena, CA				
TELEROBOTICS FIDO Rover	Index			
Engineer M. S. Garrett mgarrett@jpl.nasa.gov	Schematic Name Athena Interconnection Diagram			
Size A	Scale	Thursday, November 09, 2006	Rev -	Sheet 31 of 33

Aditional Drawings to include:
-Walkabout Box
-Actuator Driver Board
-6.2V DC-DC Converter
-Panic Button Box
-Quick Start Box
-Power System
-Motor and Encoder Test Box (Lisa Box)
-Encoder Interface Board

Actuator Driver Board Rsense Settings:

Rs = Vdac / (CSamp) (Ithreshold)

For : (Limit = 0.75A)
Rs = 4.5 / (250E-6) (0.75) = 24.0k

For Wheel & Steer RE025: (Limit = 3.0A)
Rs = 4.5 / (250E-6) (3.0) = 6.0k

For : (Limit = 1.5A)
Rs = 4.5 / (250E-6) (1.5) = 12.0k

Quick Start Header Orientation

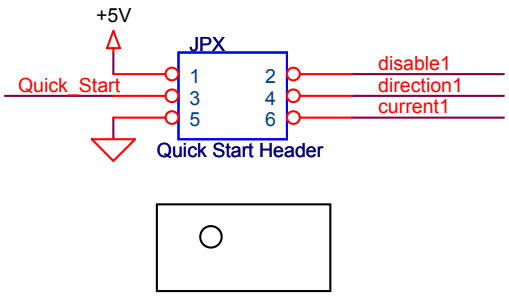

NASA / Jet Propulsion Laboratory Pasadena, CA	
TELEROBOTICS FIDO Rover	z Notes Page
Engineer M. S. Garrett mgarrett@jpl.nasa.gov	Schematic Name Athena Interconnection Diagram
Size A / Scale	Thursday, November 09, 2006 / Rev - / Sheet 32 of 33

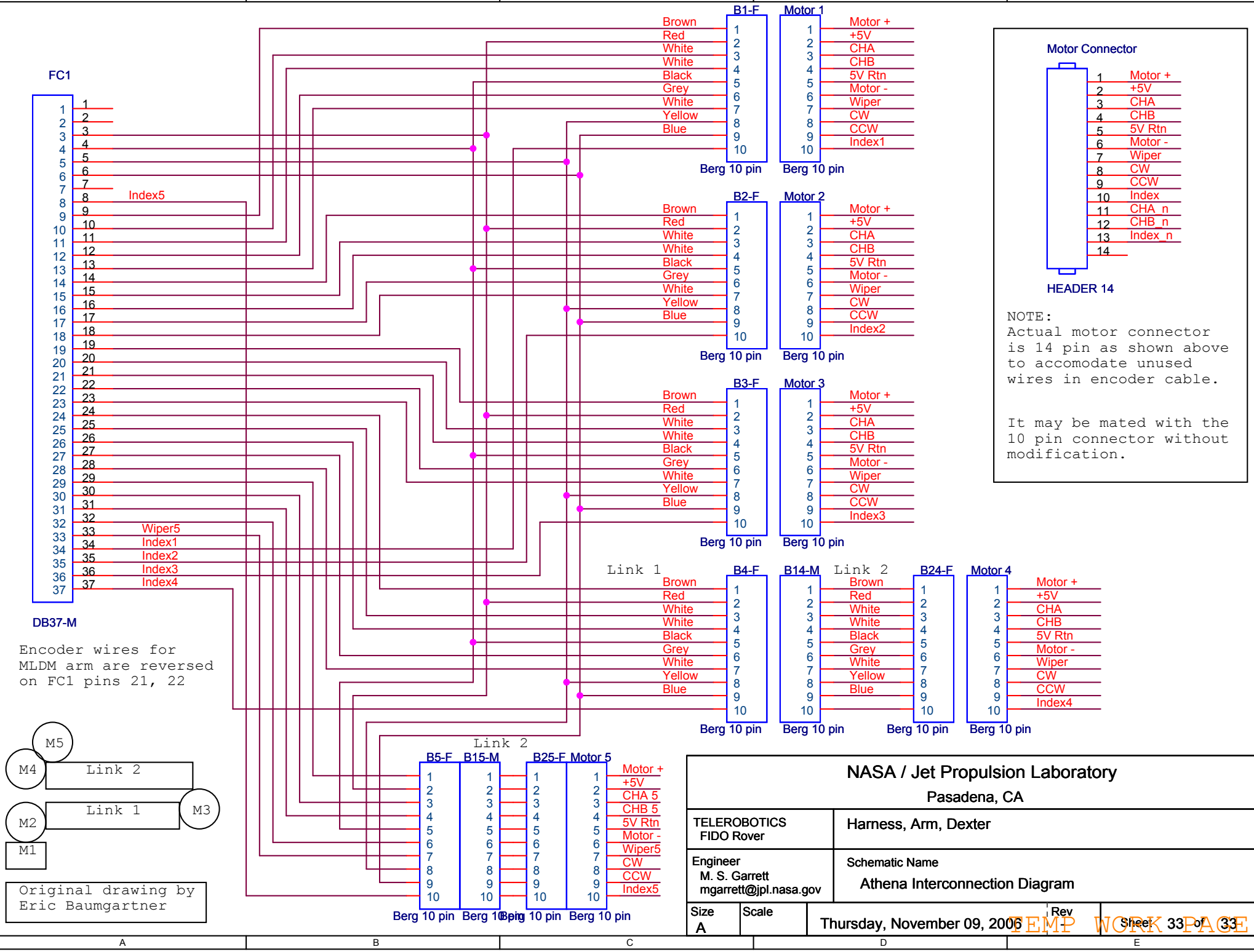
FC1
DB37-M
Index5
Wiper5
Index1
Index2
Index3
Index4
B1-F
Motor 1
B2-F
Motor 2
B3-F
Motor 3
B4-F
B14-M
B24-F
Motor 4
B5-F
B15-M
B25-F
Motor 5
Berg 10 pin
Brown
Red
White
Black
Grey
Yellow
Blue
Motor +
+5V
CHA
CHB
5V Rtn
Motor -
Wiper
CW
CCW
Index1
Index2
Index3
Index4
CHA 5
CHB 5
Wiper5
Index5
Link 1
Link 2
Motor Connector
HEADER 14
Index
CHA_n
CHB_n
Index_n
NOTE:
Actual motor connector is 14 pin as shown above to accomodate unused wires in encoder cable.
It may be mated with the 10 pin connector without modification.
Encoder wires for MLDM arm are reversed on FC1 pins 21, 22
M1
M2
M3
M4
M5
Original drawing by Eric Baumgartner
NASA / Jet Propulsion Laboratory
Pasadena, CA
TELEROBOTICS
FIDO Rover
Harness, Arm, Dexter
Engineer
M. S. Garrett
mgarrett@jpl.nasa.gov
Schematic Name
Athena Interconnection Diagram
Size
A
Scale
Thursday, November 09, 2006
Rev
Sheet 33 of 33
TEMP WORK PAGE