RE 16 ∅16 mm, Graphite Brushes, 4.5 Watt

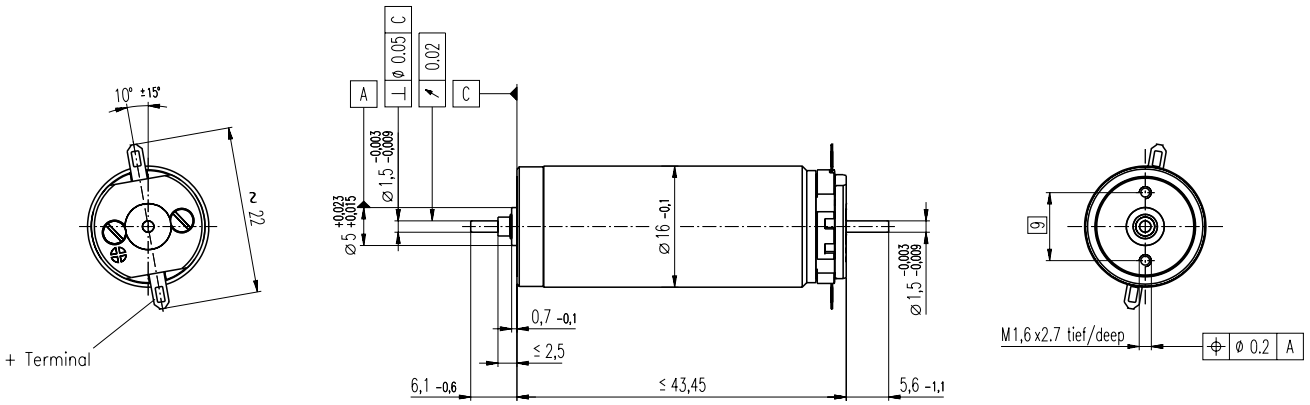

Stock program
Standard program
Special program (on request!)

Order Number

			118725	118726	118727	118728	118729	118730	118731	118732	118733	118734	118735	118736	118737	118738	118739
Motor Data																	
1	Assigned power rating	W	4.5	4.5	4.5	4.5	4.5	4.5	4.5	4.5	4.5	4.5	4.5	4.5	4.5	4.5	4.5
2	Nominal voltage	Volt	4.8	4.8	6.0	7.2	9.0	12.0	15.0	18.0	24.0	30.0	36.0	45.0	48.0	48.0	48.0
3	No load speed	rpm	12700	12200	13300	13700	13100	13900	14000	13200	14000	14700	14100	14500	14200	10100	5320
4	Stall torque	mNm	13.5	12.9	16.2	19.0	23.2	28.8	31.4	31.1	34.7	35.7	34.9	35.7	34.9	24.1	12.1
5	Speed/torque gradient	rpm/mNm	977	980	844	735	575	490	453	429	408	416	410	409	411	425	453
6	No load current	mA	105	99	88	76	57	46	37	29	23	20	16	13	12	8	4
7	Starting current	mA	3880	3540	3860	3870	3610	3550	3120	2420	2140	1850	1450	1220	1100	538	144
8	Terminal resistance	Ohm	1.24	1.36	1.56	1.86	2.49	3.38	4.81	7.44	11.2	16.2	24.8	37.0	43.8	89.1	334
9	Max. permissible speed	rpm	16000	16000	16000	16000	16000	16000	16000	16000	16000	16000	16000	16000	16000	16000	16000
10	Max. continuous current	mA	720	720	720	720	718	614	514	413	336	279	226	185	170	119	61.5
11	Max. continuous torque	mNm	2.50	2.62	3.02	3.54	4.62	4.98	5.17	5.31	5.44	5.39	5.43	5.43	5.42	5.33	5.16
12	Max. power output at Nominal voltage	mW	4210	3850	5330	6500	7710	10200	11300	10600	12500	13600	12800	13400	12900	6300	1640
13	Max. efficiency	%	69	68	71	73	76	78	79	79	80	81	81	81	81	78	71
14	Torque constant	mNm/A	3.48	3.64	4.20	4.91	6.43	8.11	10.1	12.9	16.2	19.3	24.1	29.4	31.9	44.8	83.9
15	Speed constant	rpm/V	2750	2630	2280	1940	1480	1180	948	742	589	495	397	325	299	213	114
16	Mechanical time constant	ms	17	14	11	9	8	7	6	6	5	5	5	5	5	5	5
17	Rotor inertia	gcm^2	1.65	1.38	1.27	1.20	1.25	1.27	1.25	1.22	1.23	1.17	1.17	1.15	1.15	1.10	1.02
18	Terminal inductance	mH	0.02	0.02	0.03	0.04	0.07	0.11	0.17	0.28	0.45	0.64	0.99	1.48	1.75	3.44	12.10
19	Thermal resistance housing-ambient	K/W	30	30	30	30	30	30	30	30	30	30	30	30	30	30	30
20	Thermal resistance rotor-housing	K/W	8.5	8.5	8.5	8.5	8.5	8.5	8.5	8.5	8.5	8.5	8.5	8.5	8.5	8.5	8.5
21	Thermal time constant winding	s	14	11	10	10	10	10	10	10	10	10	9	9	9	9	8

Specifications

- Axial play 0.05 - 0.15 mm
- Max. **sleeve bearing** loads
  axial (dynamic) 0.8 N
  radial (5 mm from flange) 1.5 N
  Press-fit force (static) 15 N
  (static, shaft supported) 60 N
- Radial play **sleeve bearings** 0.014 mm
- Ambient temperature range -20/+65°C
- Max. rotor temperature +85°C
- Number of commutator segments 7
- Weight of motor 40 g
- Values listed in the table are nominal. For applicable tolerances (see page 43) and additional details please request out of the maxon selection program on the settled CD-Rom.

Operating Range

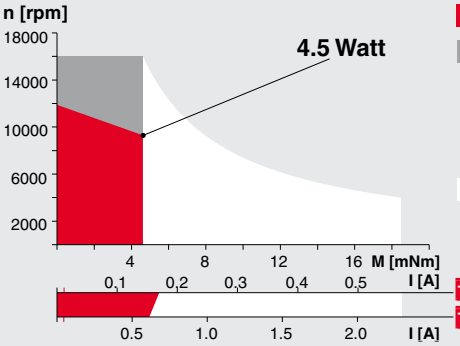

Comments Details on page 49

Recommended operating range

Continuous operation
In observation of above listed thermal resistances (lines 19 and 20) the maximum permissible rotor temperature will be reached during continuous operation at 25°C ambient.
= Thermal limit.

Short term operation
The motor may be briefly overloaded (recurring).

118737 Motor with high resistance winding
118730 Motor with low resistance winding

maxon Modular System

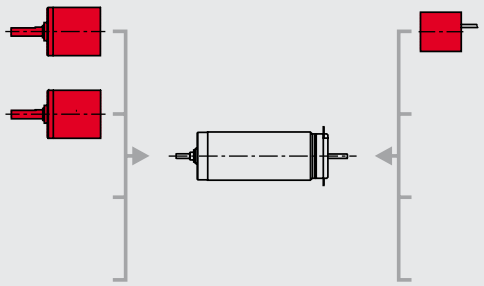

Planetary Gearhead
∅16 mm
0.1-0.3 Nm
Details page 176

Planetary Gearhead
∅16 mm
0.06-0.18 Nm
Details page 177

Digital Magnetic Encoder ∅13 mm
16 CPT, 2 channels
Details page 212