PowerCube – First Steps

Mechanical and Electrical Connection, Software Installation, PC Tools

Directory of Revisions			
Authorized by: Roland Tschakarow			
Pages: 12			
File Name: PowerCube First Steps.doc			
No.	Description	Revision Index	Date of change
001	1. Version	1.0	15.11.2002
002	Added information on mechanical connection	1.1	09.12.2002
003	Changed information electrical connection	1.2	10.12.2002
004	Changed PCubeDemo dialog	1.3	10.01.2003
005	Changed information electrical connection DP	1.4	15.01.2003

1 Mechanical and Electrical Connection, Software Installation, PC Tools

This document explains the steps necessary to make the PowerCube modules work with a PC. The first chapter describes the software and hardware requirements for using the modules.

These are the 5 steps you need to take:
1. Check the system requirements
2. Install the communication interface (Hard- and Software).
3. Electrical connection to a power supply and to the communication interface.
4. Install the software shipped with PowerCube and enter the InitString.
5. Check the correct function.

If you want to use a PLC instead of a PC, please use the document "PLC and PowerCube".

2 System requirements

Before you start the installation please check the system requirements. The table following shows the compatibilty of communication interfaces and PD operation systems.

PowerCube Communication Interface	Available and supported Interface boards	Supported Operation Systems					
		Win 9x	Win NT	Win 2K	Win XP	Linux	QNX
RS232	PC internal	x	x	x	x	x	x
CAN	ESD PCI331 (PCI board)	x	x	x		x	x
	ESD USB-Mini (USB interface)	x		x			
	ESD PCCardX (PCMCIA board)	x	x	x			
	VECTOR AC2-PCI (PCI board)	x	x	x			
	VECTOR CANCardX (PCMCIA board)	x	x	x			
	IXXAT IPCI320 PCI (PCI board)	x	x	x	x		
	IXXAT IPCI165 PCI (PCI board)	x	x	x	x		
	IXXAT TinCAN (PCMCIA board)	x	x	x	x		
Profibus DP	Simatic CP5611	x	x	x			

In order to use the PowerCube Modules with the desired communication interface you will need to specify what interface you have installed. This is done by entering a valid InitString as described later on in this document.

3 Installing the Communication Interface

Please refer to the installation procedure provided by the vendor of the interface board. All necessary manuals are shipped with the Amtec CDRom. For latest information please refer to these websites:

Hersteller	Website
ESD Electronic GmbH	www.esd-electronics.com
Vector Informatik GmbH	www.vector-informatik.de
Ixxat GmbH	www.ixxat.de
Siemens AG	www.ad.siemens.de/profibus

Every communication board has an own test program shipped with the board. Using these test programs you can verify the correct installation of the board.

4 Mechanical Connection

Before you connect the PowerCube modules to your mechanical setup please not the maximum screwing depth. The table following shows the appropriate depths measured from the module surface.

Attention! If you screwing in too deep can damage the integrated electronic components and may lead to unsafe operation.

Maximum screwing depth and torques (valid for screws of type 8.8)						
	System **70**		System **90**		System **110**	
	Depth	Torque	Depth	Torque	Depth	Torque
Side **A**	M4 x 14mm	3.0 Nm	M5 x 20mm	5.9 Nm	M6 x 16mm	10 Nm
Side **B**	M4 x 10mm	3.0 Nm	M5 x 14mm	5.9 Nm	M6 x 16mm	10 Nm

The minimum screwing depth is:
- 7.0 mm for PR 070, PDU 070, PSM 070.
- 8.0 mm for PR 090, PDU 090, PSM 090.
- 9.0 mm for PR 110, PDU 110, PSM 110.

When applying two screws in a perpendicular way (from two sides of a cube) the maximum screwing depth is:
- 5.5 mm for PR 070, PDU 070, PSM 070.
- 7.5 mm for PR 090, PDU 090, PSM 090.
- 7.0 mm for PR 110, PDU 110, PSM 110.

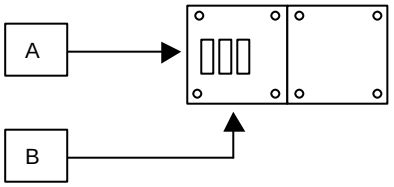

5 Electrical Connection (Voltage, Communication, I/O)

There are two options to electrically connect the PowerCube Modules:
- Using the connecting cables with SUB-D-connectors or
- Using the water protected connector housing.

How to set the electrical connections is described in detail in the appropriate chapter.

5.1 Pinning of the Hosts connectors

5.1.1 Connecting to a RS232-Host

Connector (female)	Pin	Color	Description
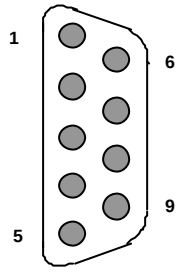	1	-	not used
	2	white	RxD
	3	brown	TxD
	4	-	not used
	5	Shield	GND
	6	-	not used
	7	-	not used
	8	-	not used
	9	-	not used

5.1.2 Connecting to a CAN-Host

Connector (female)	Pin	Color	Description
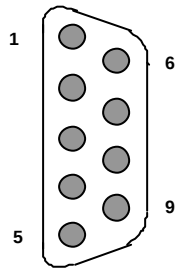	1	-	not used
	2	yellow	CAN-Lo
	3	Shield	GND
	4	-	not used
	5	-	not used
	6	-	not used
	7	green	CAN-Hi
	8	-	not used
	9	-	not used

5.1.3 Connecting to a Profibus-DP-Master

Connector (female)	Pin	Color	Description
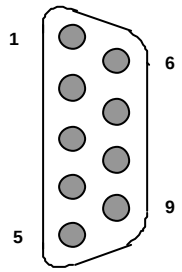	1	-	not used
	2	-	not used
	3	yellow	B1
	4	-	not used
	5	Shield	GND
	6	-	not used
	7	-	not used
	8	green	A1
	9	-	not used

5.2 Pinning of PowerCube connectors

Connector	Pin	Color	Description
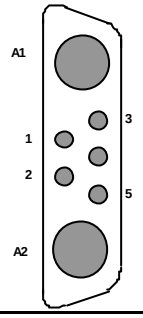	A1	red	+24V
	A2	blue	0V
	1	green	CAN-Hi resp. Profibus-A1
	2	brown	RxD
	3	yellow	CAN-Lo resp. Profibus-B1
	4	Shield	Please connect to Ground only on Masters side!
	5	white	TxD

Connector	Pin	Color	Description
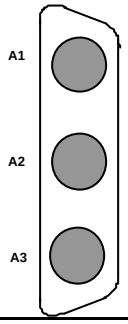	A1	-	not used
	A2	red	+48V
	A3	blue	0V

5.3 Connecting to a RS232 Interface

PowerCube interfaces to a RS232 Master using a 9-pole SUB-D female connector while the cubes have a mixed signal connector. When using the water protected connector housing (PAE 070) the connections are made by clamping. See section "Water protected connector housing".

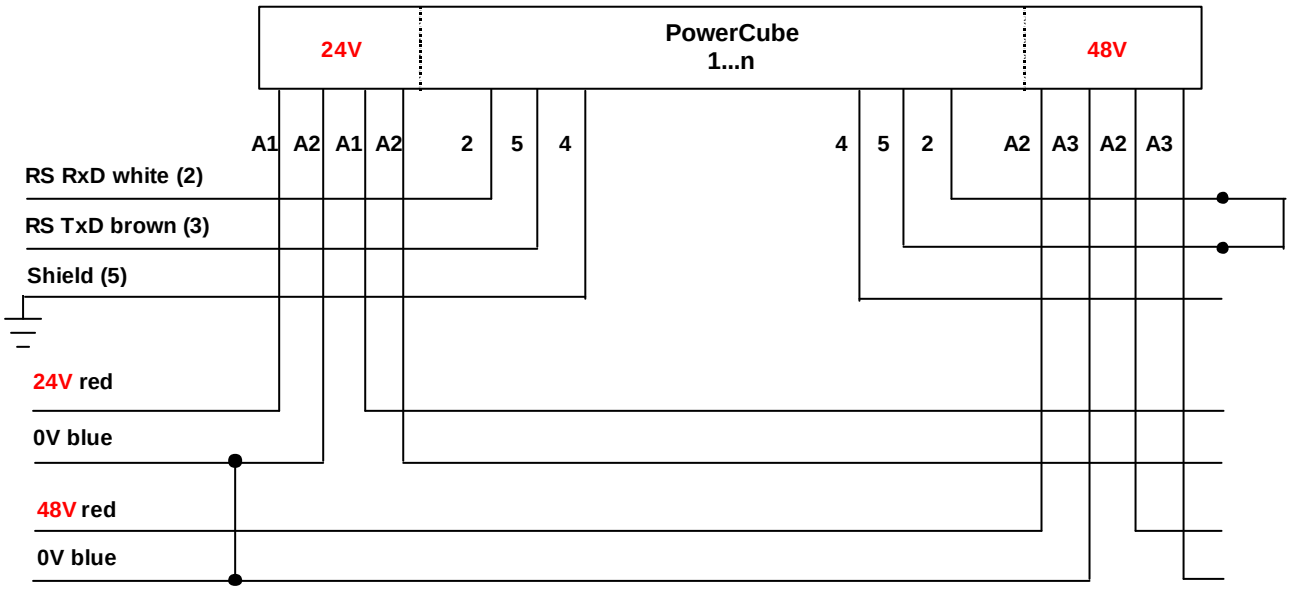

Attention: The 0V of the power supply (24 resp. 48V DC) must not be connected to Ground!

5.4 Connecting to CAN-Bus

PowerCube interfaces to a CAN Master using a 9-pole SUB-D female connector while the cubes have a mixed signal connector. When using the water protected connector housing (PAE 070) the connections are made by clamping. See section "Water protected connector housing".

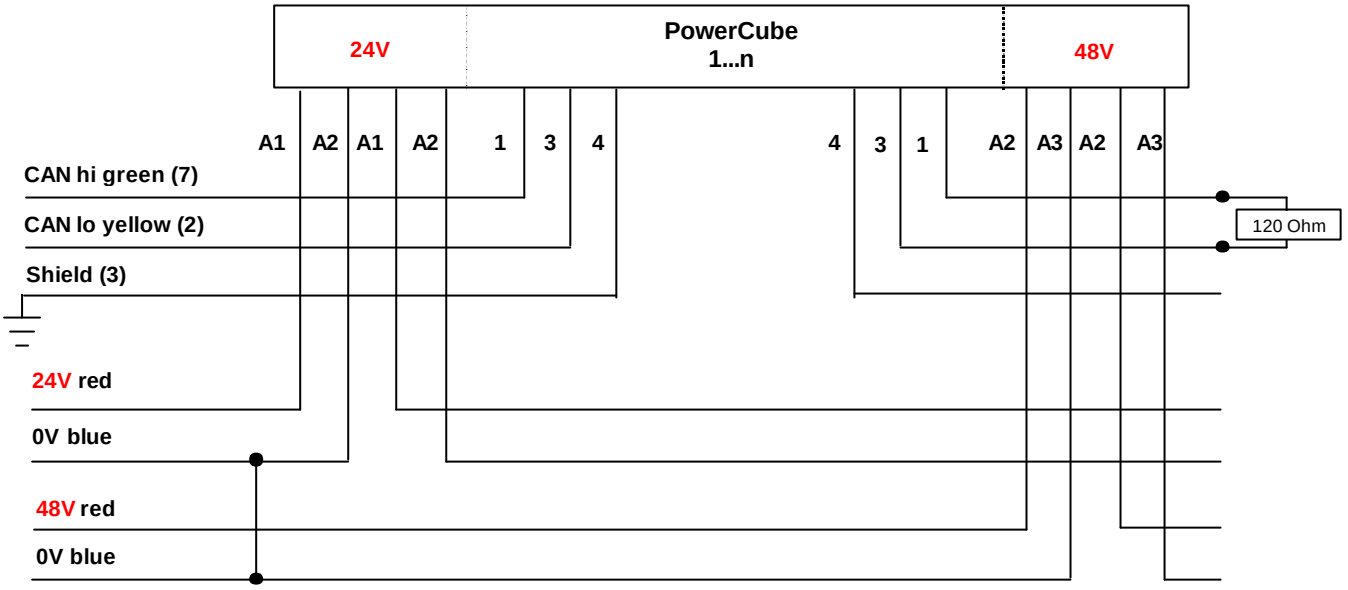

Attention: The 0V of the power supply (24 resp. 48V DC) must not be connected to Ground! The CAN bus has to be terminated with 120 ? on both ends. Please check your CAN-Interface whether there is a terminator integrated! Many interfaces have jumper configurable terminators on board.

5.5 Connecting to Profibus-DP

PowerCube interfaces to a CAN Master using a 9-pole SUB-D female connector while the cubes have a mixed signal connector. When using the water protected connector housing (PAE 070) the connections are made by clamping. See section "Water protected connector housing".

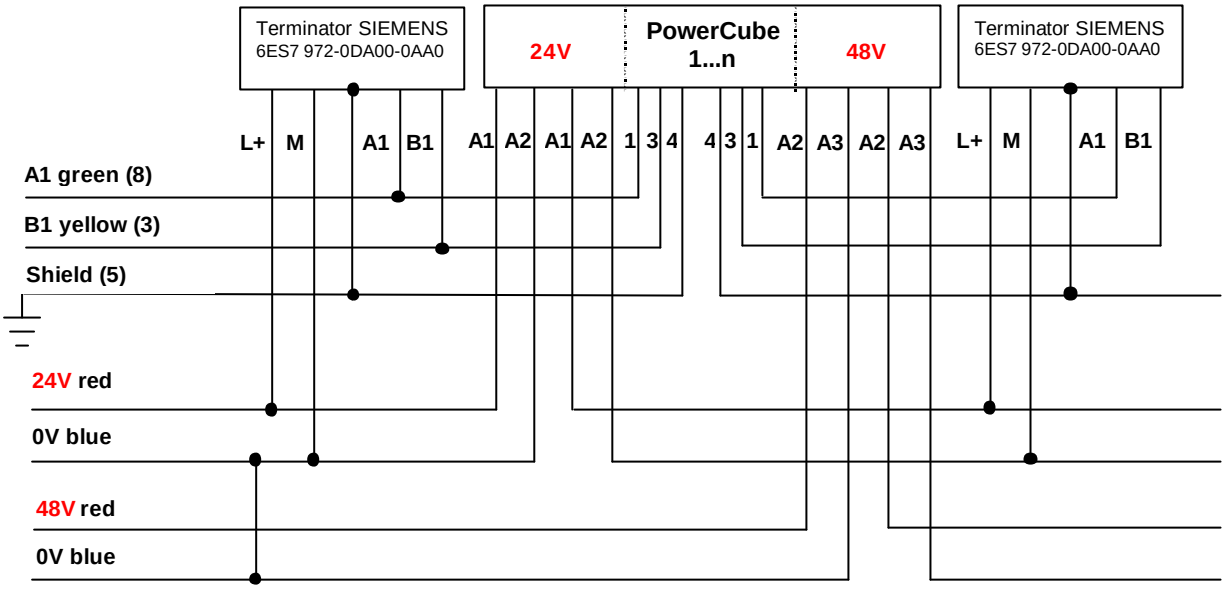

Attention: Please make sure the A1 and B1 lines of the PROFIBUS are connected exactly as specified above. If communication fails to start you may try to exchange both lines.

The bus must be terminated on both ends using an active Terminator. The 0V of the power supply (24 resp. 48V DC) must not be connected to Ground! Ground connections of all devices (PLC, Terminators) have to be made to one central point!

5.6 Pinning of 15-pole female I/O connector (Module types PR / PSM / PDU)

The Pinnings for the different I/O configurations listed in the table following are valid for module types PR, PSM and PDU only.

Connector (female)	Pin	Type I (DIO)	Type II (ESO)	Type III (ESI)
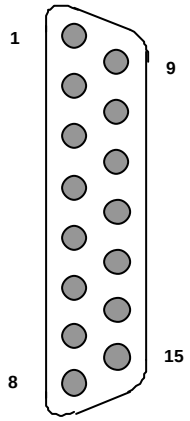	1	+24V power logic	+24V (output)	+24V (output)
	2	Input 1 (SW1)	Input 1 (SW1)	Input 1 (SW1)
	3	0V power logic	0V (output)	0V (output)
	4	-	-	-
	5	-	/Z1 (out)	/Z1 (in)
	6	Output 1	/Z2 (out)	/Z2 (in)
	7	Output 3	/N (out)	/N (in)
	8	0V power I/O	GND Encoder	GND Encoder
	9	Input 0 (SWR)	Input 0 (SWR)	Input 0 (SWR)
	10	Input 2 (SW2)	Input 2 (SW2)	Input 2 (SW2)
	11	-	-	-
	12	Input 3	Z1 (out)	Z1 (in)
	13	Output 0	Z2 (out)	Z2 (in)
	14	Output 2	N (out)	N (in)
	15	+24V power I/O	-	-

All pins marked with "-" must not be connected!

5.6.1 Connecting an I/O-Interface type I DIO with external power supply

The connection diagram shown below is valid for module types PR, PSM and PDU with I/O-Interface Type I (DIO) only. Please check your shipping documents in case of doubt.

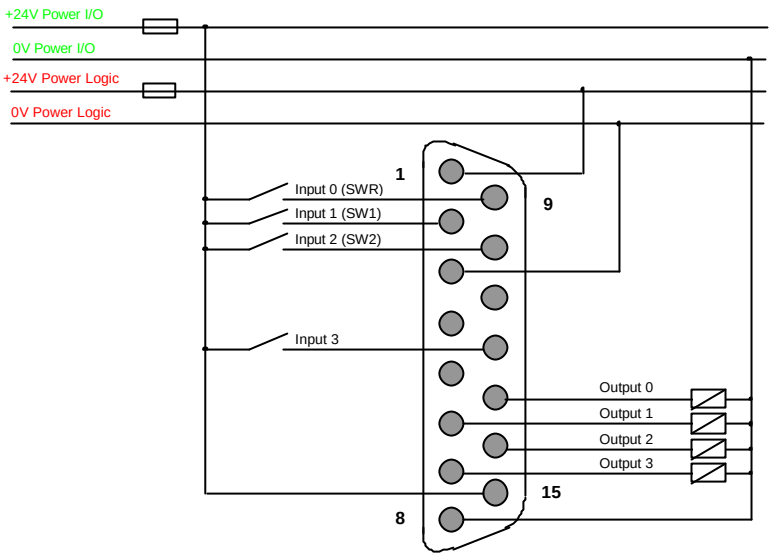

When using this connection Jumper J1 (behind the 15-pole female connector) must not be set! The voltages for I/O and Logic can be supplied from one source.

5.6.2 Connecting an I/O-Interface type I DIO with internal power supply

The connection diagram shown below is valid for module types PR, PSM and PDU with I/O-Interface Type I (DIO) only. Please check your shipping documents in case of doubt.

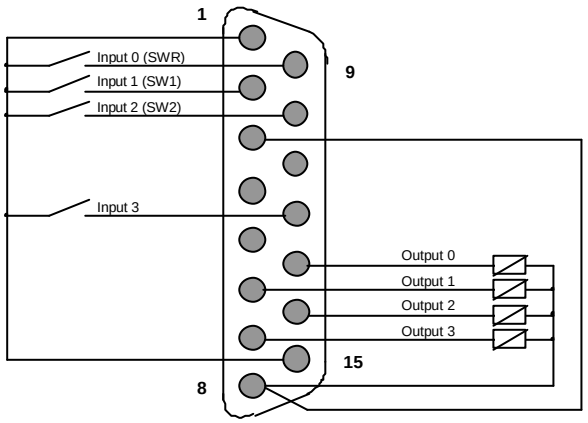

When using this connection Jumper J1 (behind the 15-pole female connector) must be set!

5.6.3 Connecting an I/O-Interface type II ESO

The connection diagram shown below is valid for module types PR, PSM and PDU with I/O-I/O-Interface Type II (ESO) only. Please check your shipping documents in case of doubt.

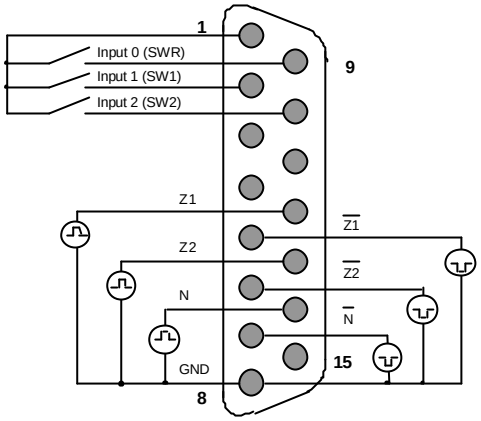

When using this connection Jumper J1 (behind the 15-pole female connector) must be set! In this case a separate 24V Logic power supply is not possible.

5.6.4 Connecting an I/O-Interface type III ESI

The connection diagram shown below is valid for module types PR, PSM and PDU with I/O-I/O-Interface Type III (ESI) only. Please check your shipping documents in case of doubt.

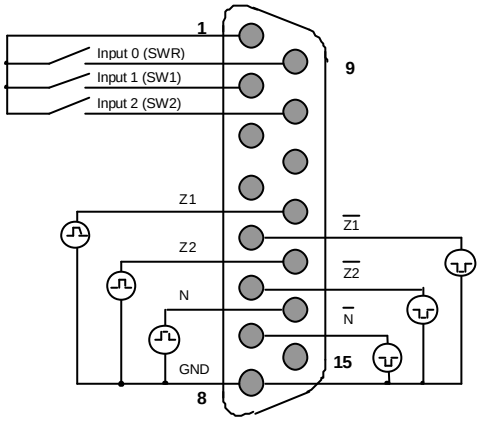

When using this connection Jumper J1 (behind the 15-pole female connector) must be set! In this case a separate 24V Logic power supply is not possible.

5.7 Pinning of 15-pole female I/O connector (module type PG)

The Pinning for the I/O configuration listed in the table following is valid for module types PG only.

Connector (female)	Pin	Description
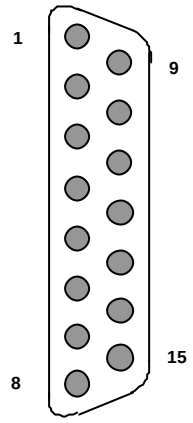	1	+24V Power Logic
	2	Input 1 (SW1)
	3	0V Power Logic
	4	-
	5	-
	6	Output 1
	7	Output 3
	8	0V Power Outputs
	9	Input 0 (SWR)
	10	Input 2 (SW2)
	11	0V Power Inputs
	12	Input 3
	13	Output 0
	14	Output 2
	15	+24V Power Outputs

All pins marked with "-" must not be connected!

The connection diagram shown below is valid for module type PG only. Please check your shipping documents in case of doubt.

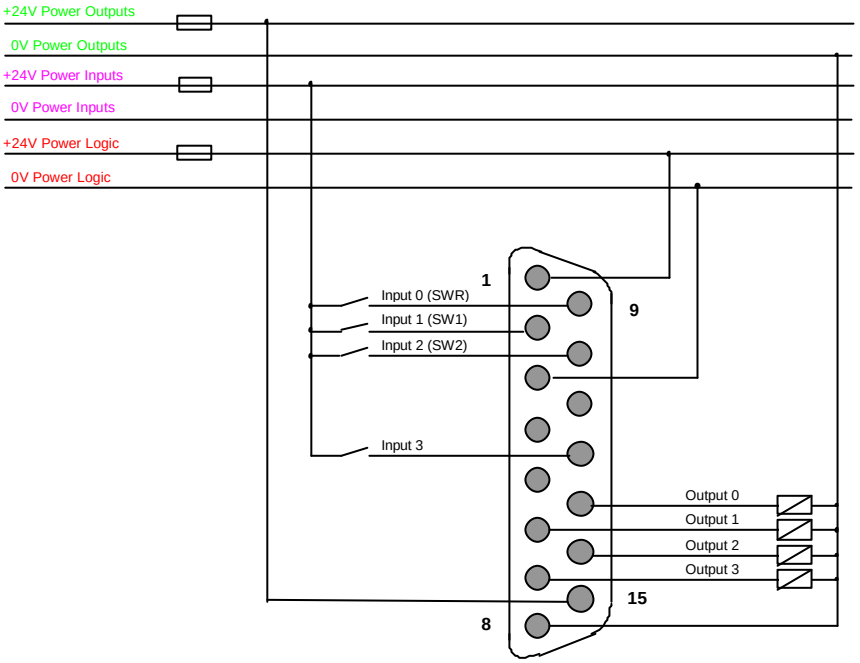

The Voltages for Inputs, Outputs and Logic can be supplied from one source. For PG modules an internal 24V power supply is not available.

5.8 Water Protected Connector Housing

Connecting the water protected connector housing depends on the module type and the communication interface used. Please refer to section "Pinning of 15-pole female I/O connector ".

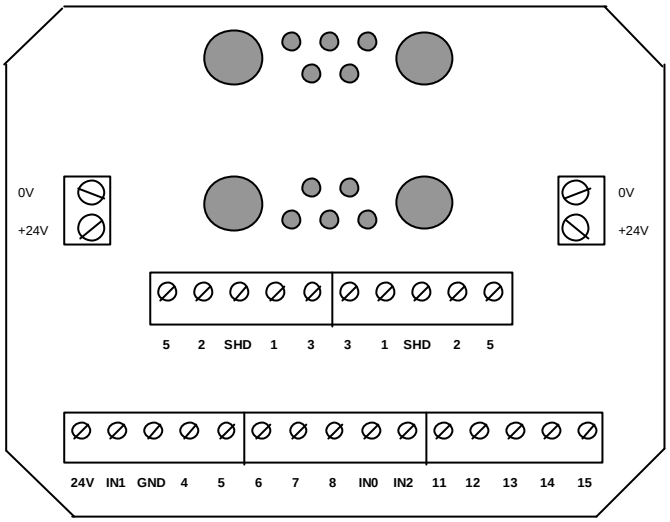

5.9 Maximum cable length for communication and power supply

A secure and lasting function of the modules is achieved by limiting the cable lengths to the given maximum. Longer cable connections or use of low quality cables can lead to instable communication and loss of power.

Communication interface	Baud rate	Maximum Length of Bus cable	Typical Acknowledge Time
RS232	9600 bit/s	10 m	(24 + 10 x n) ms *
	19200 bit/s	8 m	(12 + 5 x n) ms *
	38400 bit/s	6 m	(6 + 2.5 x n) ms *
CAN	250 kBit/s	50 m	0.9 ms
	500 kBit/s	30 m	0.6 ms
	1000 kBit/s	9 m	0.5 ms
Profibus DP	1500 kBit/s	30 m	30 ms *

(*) In these applications the acknowledge time depends on the amount of modules (n) connected to the bus.

6 Installing the test software

On the CDRom shipped with the PowerCubes you can find the "PCubeDemo" software. This software helps in setup and functional test of PowerCube modules. On top of this PCubeDemo provides a simple way for diagnostics and troubleshooting because all relevant data is acquired and displayed.

6.1 Starting the installation

Installation starts automatically after double clicking the file "PCubeDemo.msi". The Microsoft-Windows-Installer will guide you through a step by step process, e.g. choosing the installation folder. If the Microsoft-Installer (MSI) is not yet available on your PC you can download it from our website www.powercube.de.

6.2 Entering the InitString

The InitString is used to let the software know what communication interface has been installed. These InitStrings are defined:

PowerCube Communication Interface	Available and supported boards	InitStrings and parameters
CAN	ESD PCI331 (PCI board)	ESD:0,250 0 = CAN-Port (depends on installed boards) 250 = CAN-Baudrate (alternate 500,1000)
	ESD USB-Mini (USB board)	
	ESD PCCardX (PCMCIA board)	
	VECTOR AC2-PCI (PCI board)	VECTOR:6,0,0,250 2 = board type is AC2 (PCI-Bus) 0 = Index of installed board (alternate 1) 0 = Port of board (alternate 1) 250 = CAN-Baudrate (alternate 500, 1000)
	VECTOR CANCardX (PCMCIA board)	VECTOR:2,0,0,250 2 = board type is CanCardX (PCMCIA) 0 = Index of installed board 0 = Port of board (alternate 1) 250 = CAN-Baudrate (alternate 500, 1000)
	IXXAT IPCI320 PCI (PCI board)	UCI:7,0,250 7 = board type is IPCI320 (PCI-Bus) 0 = reserviert 250 = Can-Baudrate (alternate 500, 1000)
	IXXAT IPCI165 PCI (PCI board)	UCI:6,0,250 6 = board type is IPCI165 (PCI-Bus) 0 = reserviert 250 = Can-Baudrate (alternate 500, 1000)
	IXXAT TinCAN (PCMCIA board)	UCI:3,0,250 3 = board type is TinCan 0 = PCMCIA slot 0 (alternate 1) 250 = Can-Baudrate (alternate 500, 1000)
Profibus DP	Simatic CP5611	CP5X11:1 1 = Profibus-Port (depends on installed boards)
RS232	PC internal	RS232:1,9600 1 = COM-Port (alternate 2) 9600 = Baudrate (alternate 19200, 38400)

In the test program PCubeDemo the InitString is entered by choosing menu "File/Setup". Fill in the valid InitString and store it with press OK button:

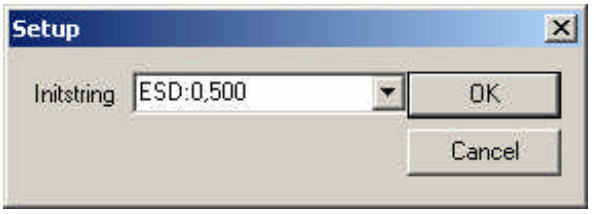

Now hit the Scan button to obtain a list of all connected PowerCube-Modules. Refer to the PCubeDemo manual to learn more about test and diagnostics of PowerCubes.

7 Troubleshooting

This chapter is subject to change.