TABLE OF CONTENTS

SH #	MOD	MOD TITLE	DESCRIPTION
1	/	TOP LEVEL	REVISION SHEET
2	/	TOP LEVEL	DECOUPLING CAPACITORS
3	/	TOP LEVEL	FUNCTIONAL DIAGRAM
4	/	TOP LEVEL	CONN. TO P1
5	/	TOP LEVEL	CONN. TO P2
6	/	SCANNER_FPGA	I/O FPGA SCANNER
7	/	LASER_FPGA	I/O FPGA LASER
8	/	BUFFERS	BUFFER
9	/	DA	D/A CONVERTERS
10	/	AD	A/D CONVERTERS
11	/	AD	A/D CONVERTERS

LTR	DESCRIPTION	DR	CHK	PKG	DSGN SUPV	CODE	DATA MGT	RELEASE DATE
A	INITIAL RELEASE	SEE TITLE BLOCK				D		

REVISED
OCT 1, 2003

26	27	28	29	30	31	32	33	34	35	36	37	38	39	40	41	42	43	44	45	46	47	48	49	50	51	52	53
REVISION	A	A	A	A	A	A	A	A	A																		
SHEET	1	2	3	4	5	6	7	8	9	10	11	12	13	14	15	16	17	18	19	20	21	22	23	24	25		

/home/steve/jpl/rocky7

CONTRACT NO. XXXXX
PREPARED BY SECTION 344
APPD _____ DATE _____

JET PROPULSION LABORATORY
CALIFORNIA INSTITUTE OF TECHNOLOGY
RELEASED THROUGH SECTION 351

X	LIDAR
NEXT ASSEMBLY	USED ON
APPLICATION	

ROCKY 7
PT

DR	S.WANGER	01-27-2003
CHK	n	MM-DD-YY
ENGR	n	MM-DD-YY
DSGN SUPV	n	MM-DD-YY

SIZE	ID		REV
D	23835	10237373	A

SCALE: NONE | UNCLASSIFIED | SHEET 1 OF 9

CODE	LTR	ECI NO.	DATE	DR	CHK	ENGR
D	A	init.	xx-xx-xx	n	n	n

I/O FPGA

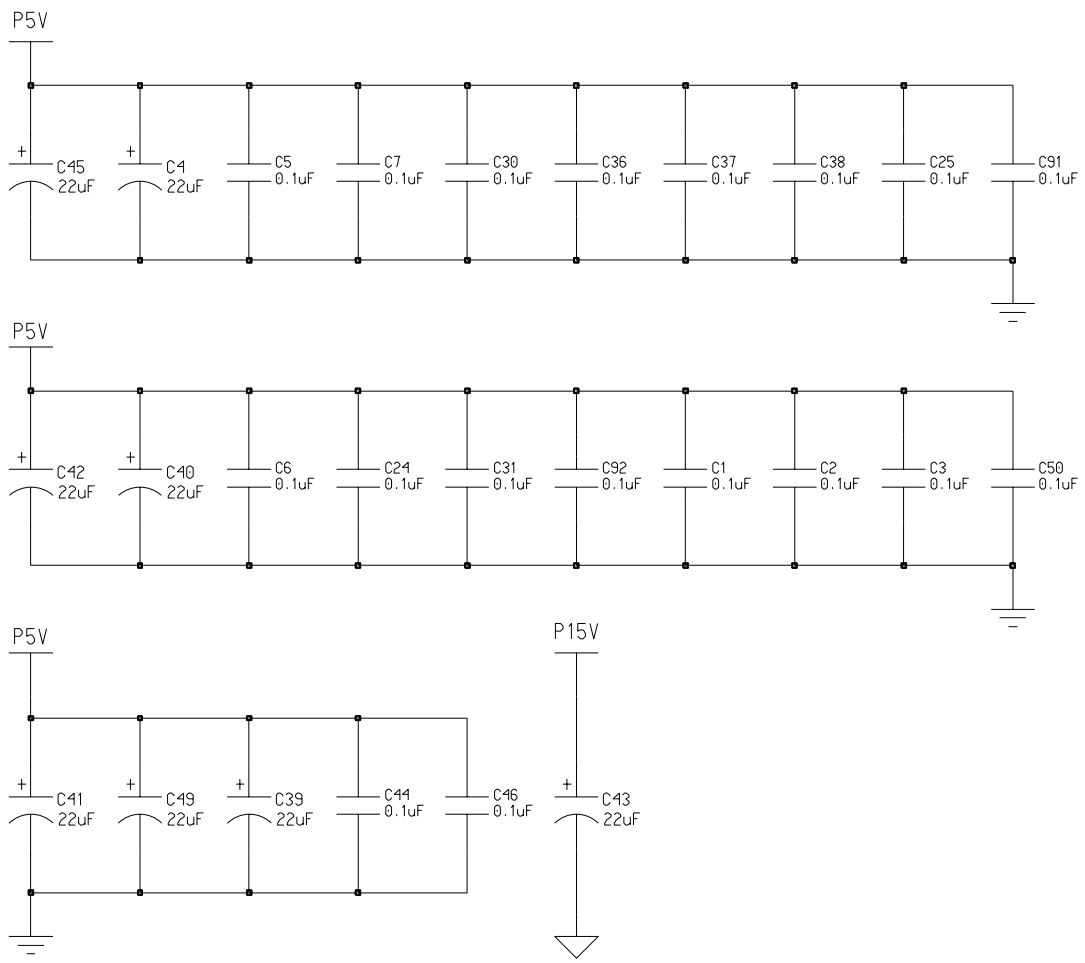

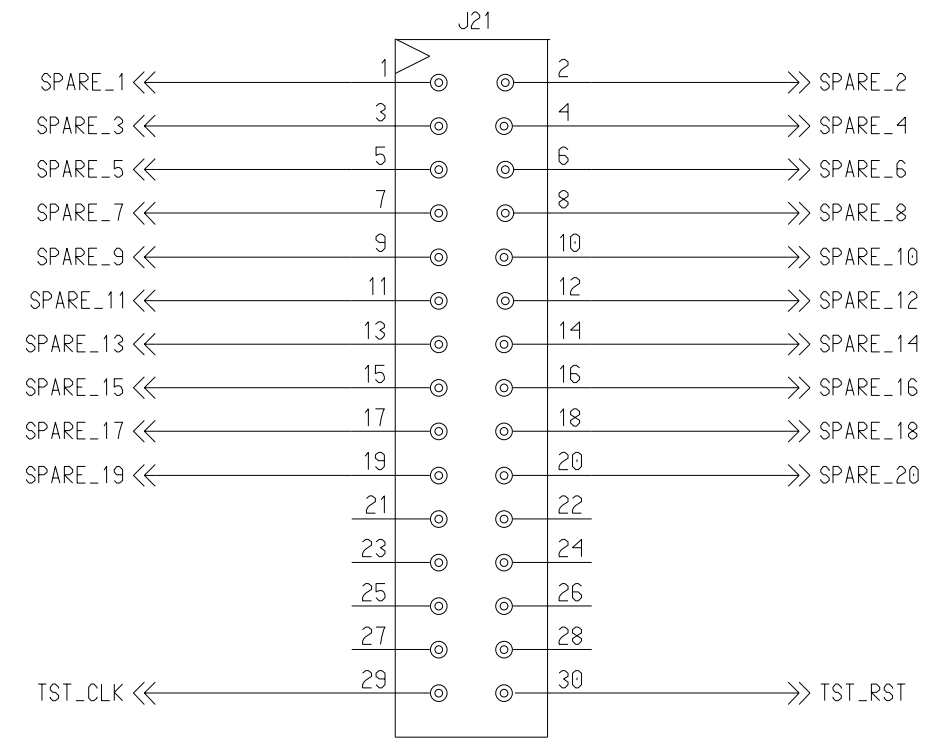

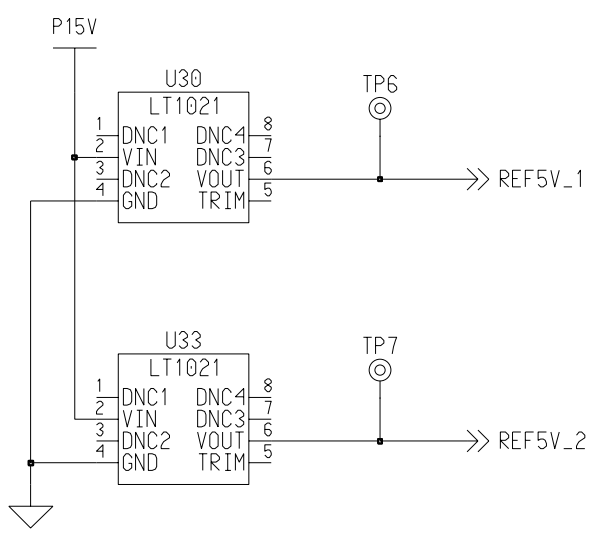

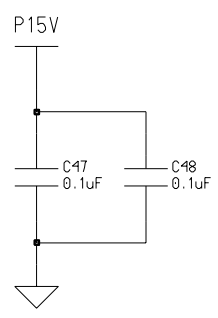

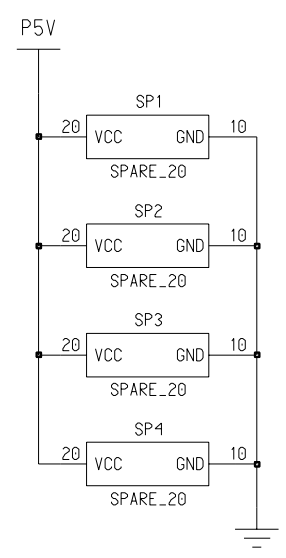

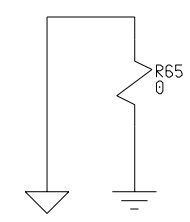

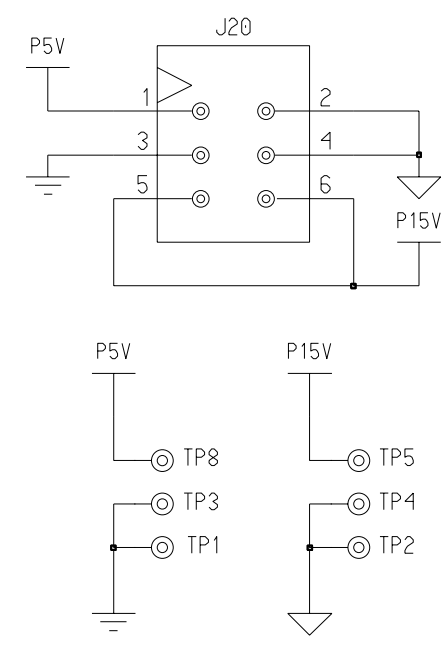

/home/steve/jpl/rocky7 sheet2

steve	SIZE	ID		REV
Wednesday, October 1, 2003	B	23835	10237373	A
9:41:16 am	SCALE: NONE	UNCLASSIFIED	SHEET 2 OF 9	

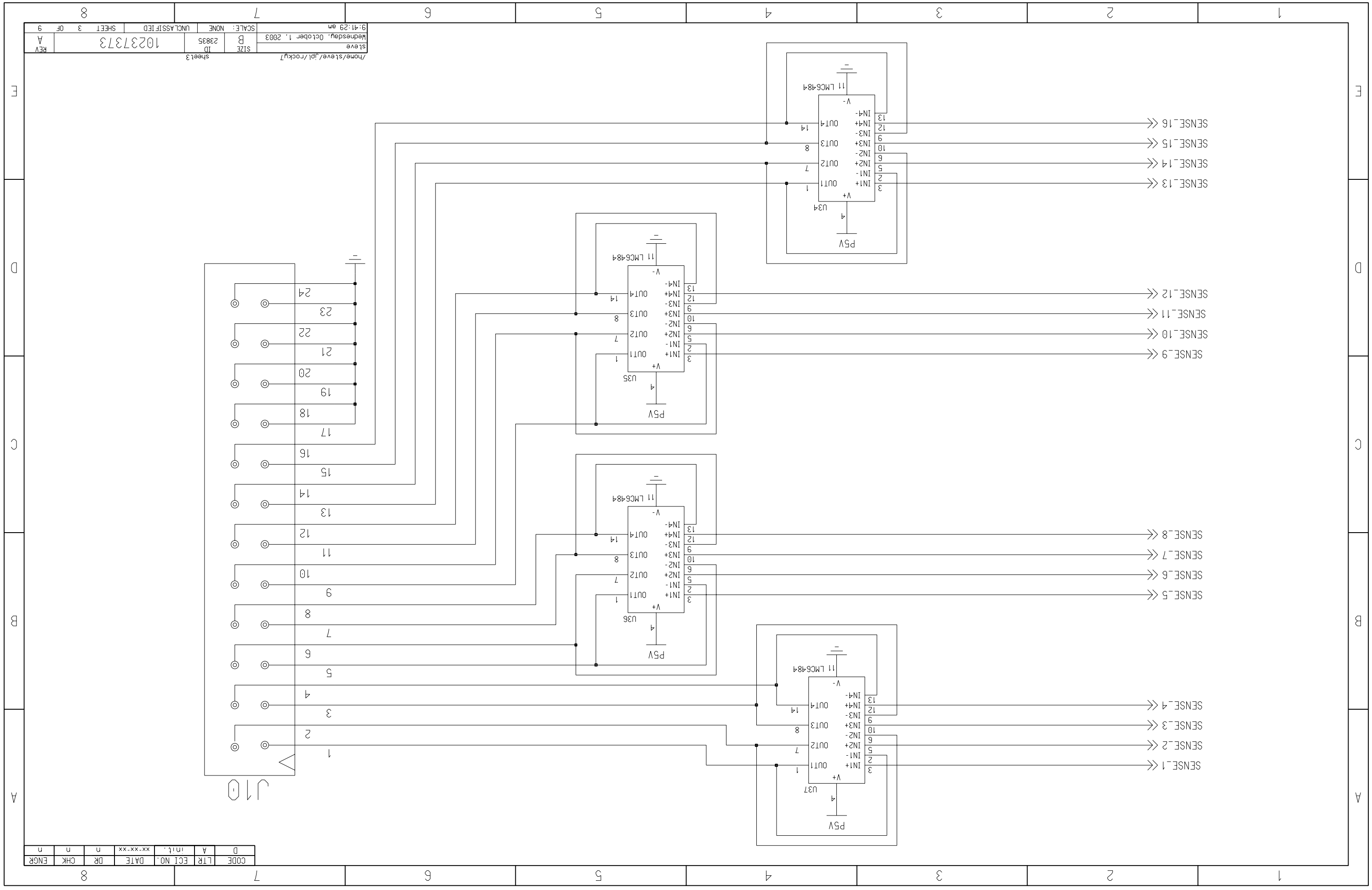

CODE	LTR	ECI NO.	DATE	DR	CHK	ENGR
D	A	n.l.	xx-xx-xx	n	n	n

/home/steve/jdl/rockyU7 sheet3

steve	SIZE	10237373	REV
Wednesday, October 1, 2003	B	23835	A
9:41:29 am	SCALE: NONE	UNCLASSIFIED	SHEET 3 OF 9

CODE	LTR	ECI NO.	DATE	DR	CHK	ENGR
D	A	init.	xx-xx-xx	n	n	n

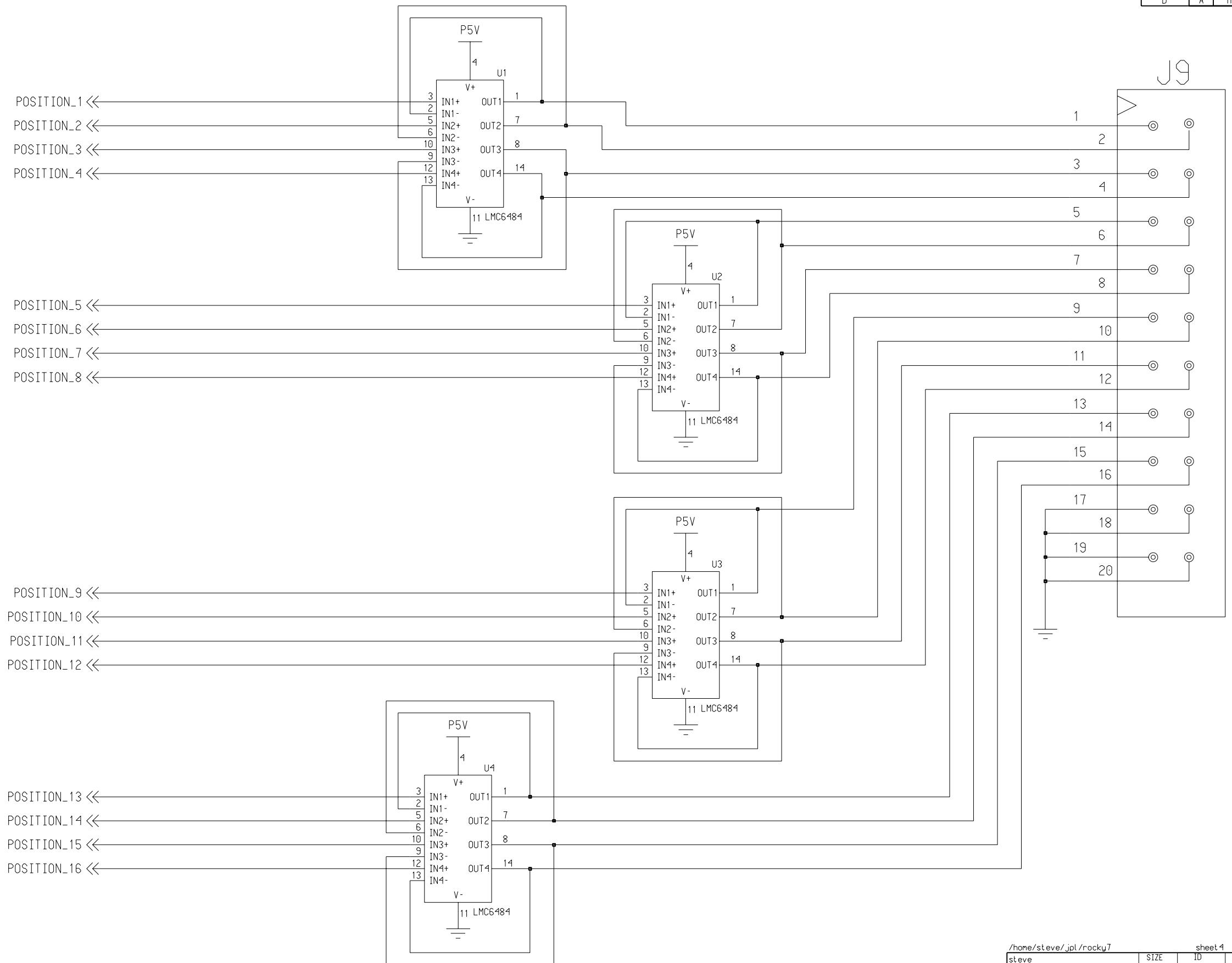

/home/steve/jpl/rocky7 sheet 4

steve	SIZE B	ID 23835	10237373	REV A
Wednesday, October 1, 2003 9:41:42 am	SCALE: NONE	UNCLASSIFIED	SHEET 4 OF 9	

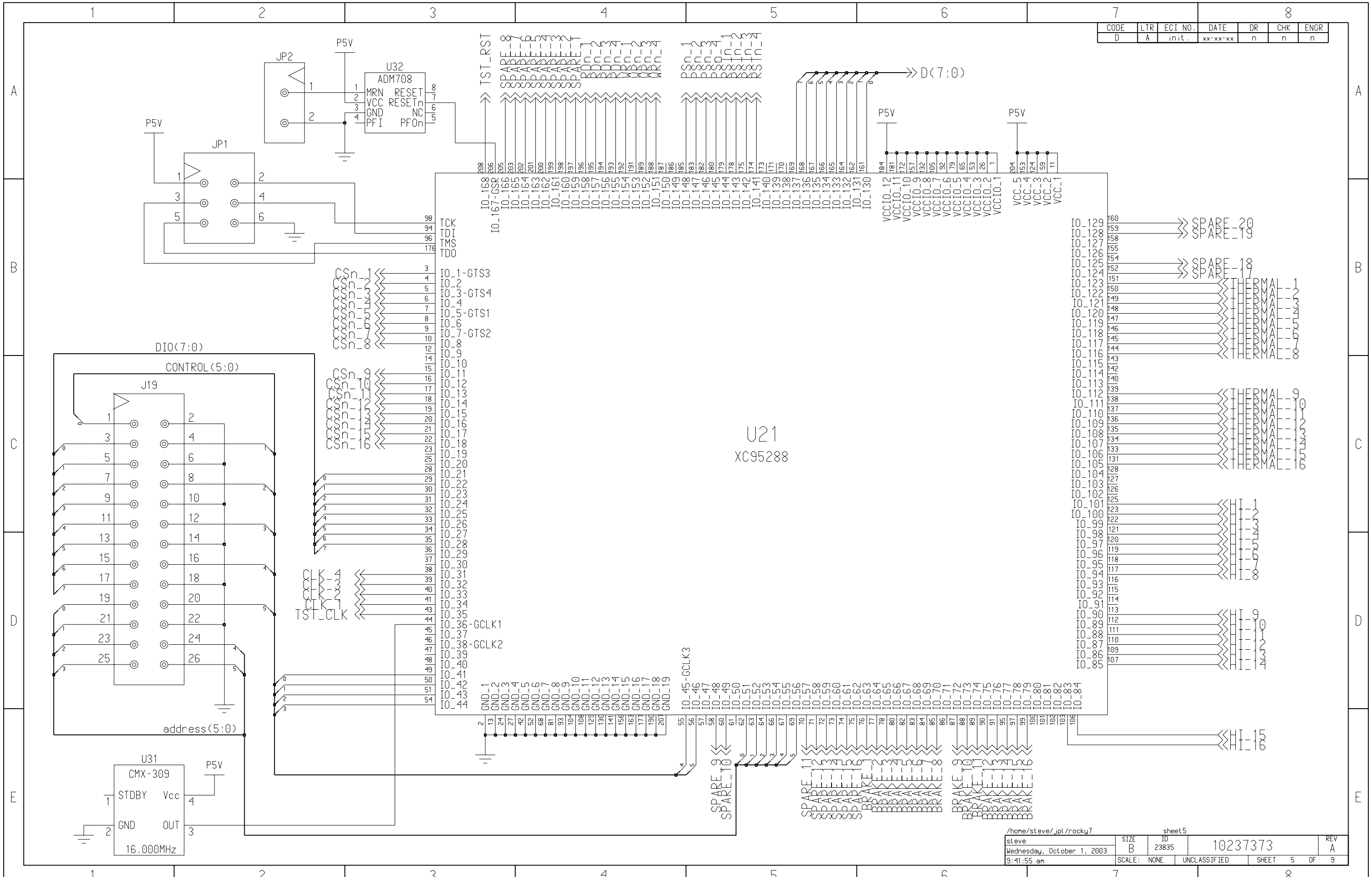

CODE D
LTR A
ECI NO. init.
DATE xx-xx-xx
DR n
CHK n
ENGR n
U32
ADM708
MRN RESET
VCC RESETn
GND NC
PFI PFOn
JP2
JP1
P5V
TST_RST
D(7:0)
TCK
TDI
TMS
TDO
IO_1-GTS3
IO_3-GTS4
IO_5-GTS1
IO_7-GTS2
IO_36-GCLK1
IO_38-GCLK2
IO_45-GCLK3
DIO(7:0)
CONTROL(5:0)
J19
address(5:0)
U21
XC95288
SPARE_20
SPARE_19
SPARE_18
SPARE_17
THERMAL_1
THERMAL_2
THERMAL_3
THERMAL_4
THERMAL_5
THERMAL_6
THERMAL_7
THERMAL_8
THERMAL_9
THERMAL_10
THERMAL_11
THERMAL_12
THERMAL_13
THERMAL_14
THERMAL_15
THERMAL_16
HI_1
HI_2
HI_3
HI_4
HI_5
HI_6
HI_7
HI_8
HI_9
HI_10
HI_11
HI_12
HI_13
HI_14
HI_15
HI_16
U31
CMX-309
STDBY Vcc
GND OUT
16.000MHz
/home/steve/jpl/rocky7
sheet5
steve
Wednesday, October 1, 2003
9:41:55 am
SIZE B
ID 23835
10237373
REV A
SCALE: NONE
UNCLASSIFIED
SHEET 5 OF 9

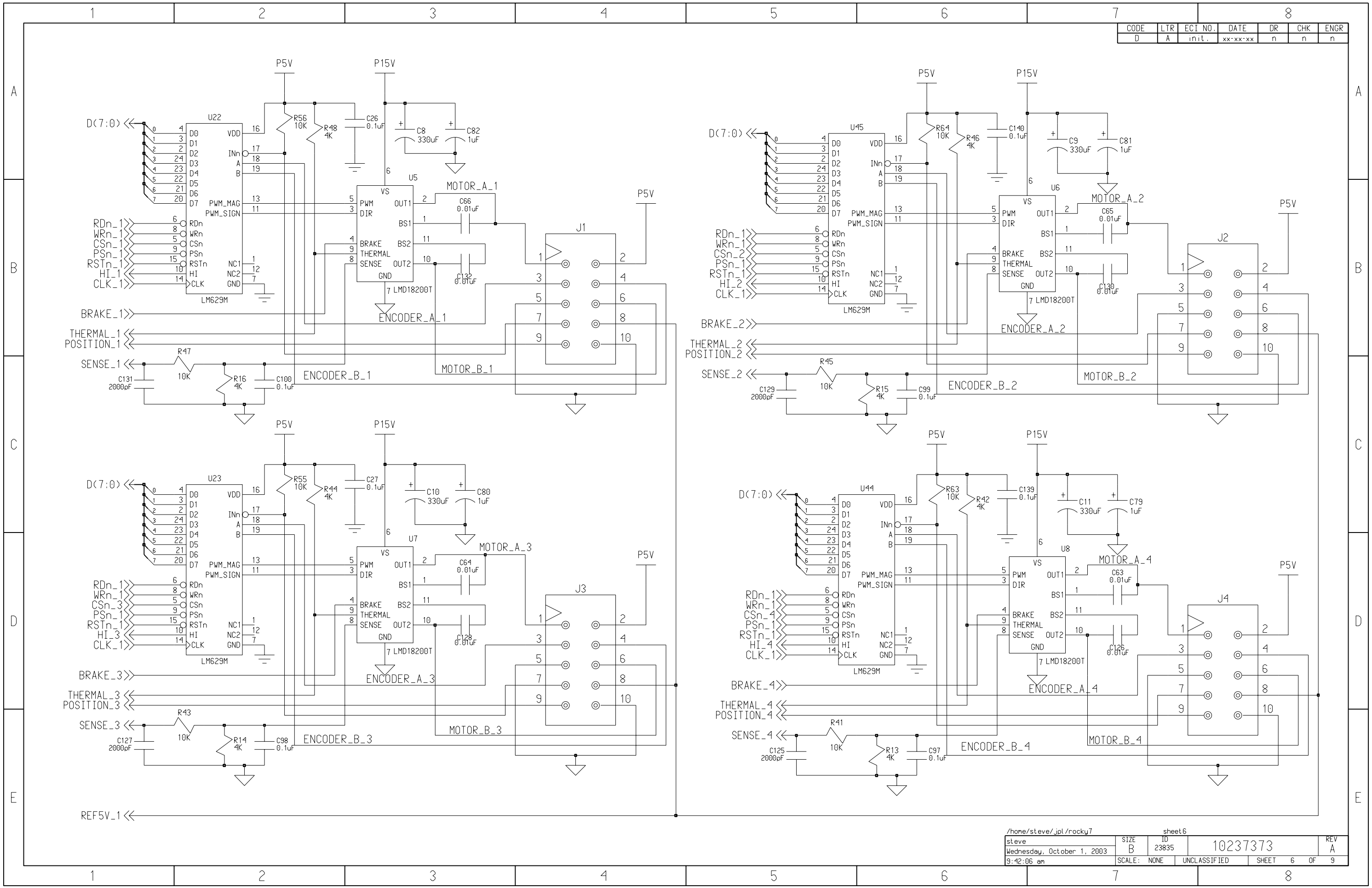

CODE LTR ECI NO. DATE DR CHK ENGR
D A init. xx-xx-xx n n n
U22
LM629M
U5
LMD18200T
U45
LM629M
U6
LMD18200T
U23
LM629M
U7
LMD18200T
U44
LM629M
U8
LMD18200T
J1
J2
J3
J4
MOTOR_A_1
MOTOR_A_2
MOTOR_A_3
MOTOR_A_4
MOTOR_B_1
MOTOR_B_2
MOTOR_B_3
MOTOR_B_4
ENCODER_A_1
ENCODER_A_2
ENCODER_A_3
ENCODER_A_4
ENCODER_B_1
ENCODER_B_2
ENCODER_B_3
ENCODER_B_4
D(7:0)
P5V
P15V
REF5V_1
/home/steve/jpl/rocky7
sheet6
steve
Wednesday, October 1, 2003
9:42:06 am
SIZE B
ID 23835
10237373
REV A
SCALE: NONE
UNCLASSIFIED
SHEET 6 OF 9

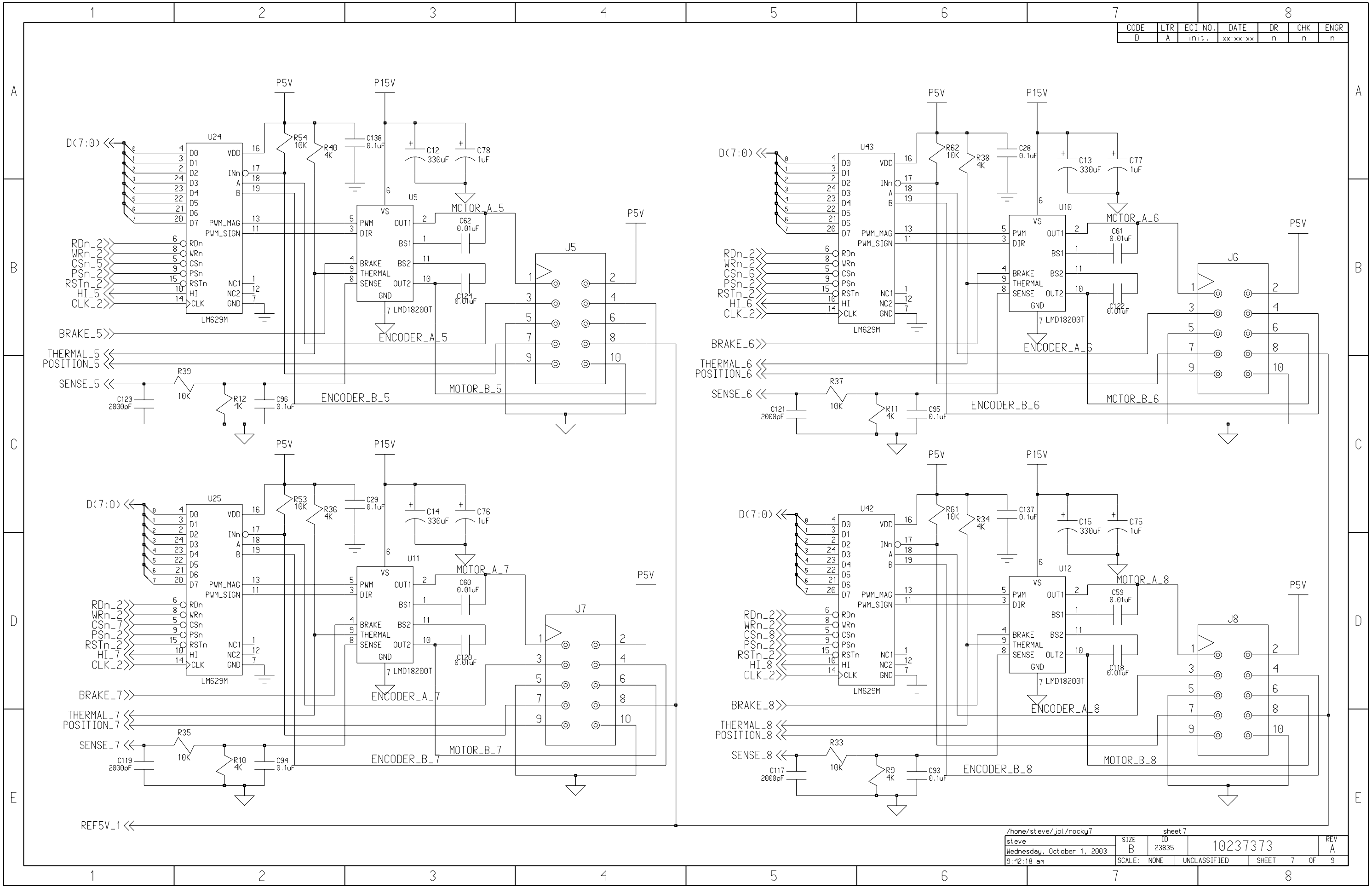

CODE LTR ECI NO. DATE DR CHK ENGR
D A init. xx-xx-xx n n n
U24
LM629M
U9
LMD18200T
U25
U11
U43
U10
U42
U12
J5
J6
J7
J8
D(7:0)
P5V
P15V
MOTOR_A_5
MOTOR_B_5
ENCODER_A_5
ENCODER_B_5
MOTOR_A_6
MOTOR_B_6
ENCODER_A_6
ENCODER_B_6
MOTOR_A_7
MOTOR_B_7
ENCODER_A_7
ENCODER_B_7
MOTOR_A_8
MOTOR_B_8
ENCODER_A_8
ENCODER_B_8
BRAKE_5
THERMAL_5
POSITION_5
SENSE_5
BRAKE_6
THERMAL_6
POSITION_6
SENSE_6
BRAKE_7
THERMAL_7
POSITION_7
SENSE_7
BRAKE_8
THERMAL_8
POSITION_8
SENSE_8
REF5V_1
RDn_2
WRn_2
CSn_5
PSn_2
RSTn_2
HI_5
CLK_2
RDn_2
WRn_2
CSn_6
PSn_2
RSTn_2
HI_6
CLK_2
RDn_2
WRn_2
CSn_7
PSn_2
RSTn_2
HI_7
CLK_2
RDn_2
WRn_2
CSn_8
PSn_2
RSTn_2
HI_8
CLK_2
/home/steve/jpl/rocky7
sheet7
steve
Wednesday, October 1, 2003
9:42:18 am
SIZE B
ID 23835
10237373
REV A
SCALE: NONE
UNCLASSIFIED
SHEET 7 OF 9

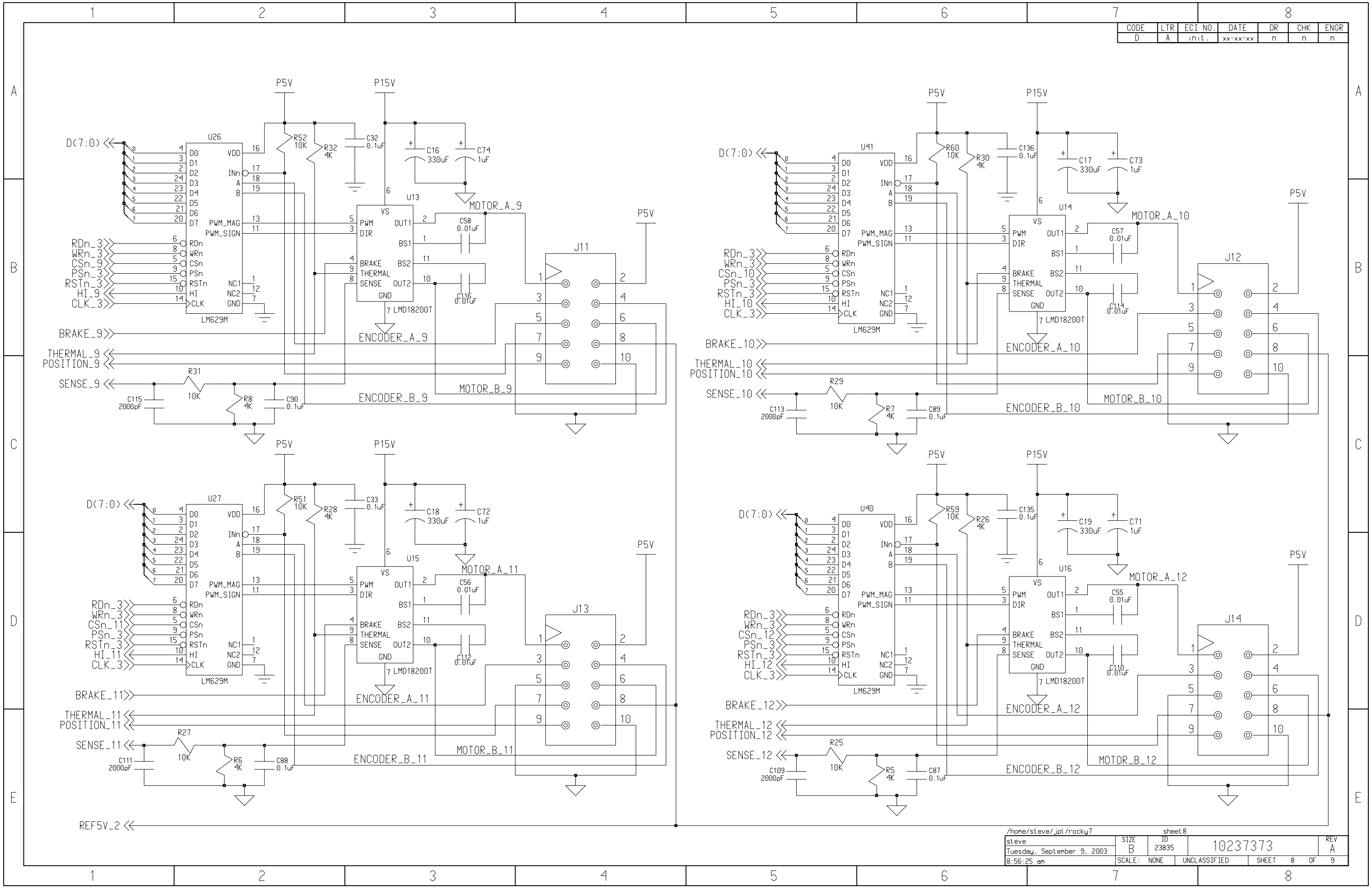

CODE LTR ECI NO. DATE DR CHK ENGR
D A init. xx-xx-xx n n n
U26
LM629M
U13
LMD18200T
U27
U15
U41
U14
U40
U16
J11
J12
J13
J14
D(7:0)
P5V
P15V
RDn_3
WRn_3
CSn_9
PSn_3
RSTn_3
HI_9
CLK_3
BRAKE_9
THERMAL_9
POSITION_9
SENSE_9
MOTOR_A_9
ENCODER_A_9
MOTOR_B_9
ENCODER_B_9
RDn_3
WRn_3
CSn_11
PSn_3
RSTn_3
HI_11
CLK_3
BRAKE_11
THERMAL_11
POSITION_11
SENSE_11
MOTOR_A_11
ENCODER_A_11
MOTOR_B_11
ENCODER_B_11
REF5V_2
RDn_3
WRn_3
CSn_10
PSn_3
RSTn_3
HI_10
CLK_3
BRAKE_10
THERMAL_10
POSITION_10
SENSE_10
MOTOR_A_10
ENCODER_A_10
MOTOR_B_10
ENCODER_B_10
RDn_3
WRn_3
CSn_12
PSn_3
RSTn_3
HI_12
CLK_3
BRAKE_12
THERMAL_12
POSITION_12
SENSE_12
MOTOR_A_12
ENCODER_A_12
MOTOR_B_12
ENCODER_B_12
/home/steve/jpl/rocky7
sheet8
steve
Tuesday, September 9, 2003
8:56:25 am
SIZE B
ID 23835
10237373
REV A
SCALE: NONE
UNCLASSIFIED
SHEET 8 OF 9

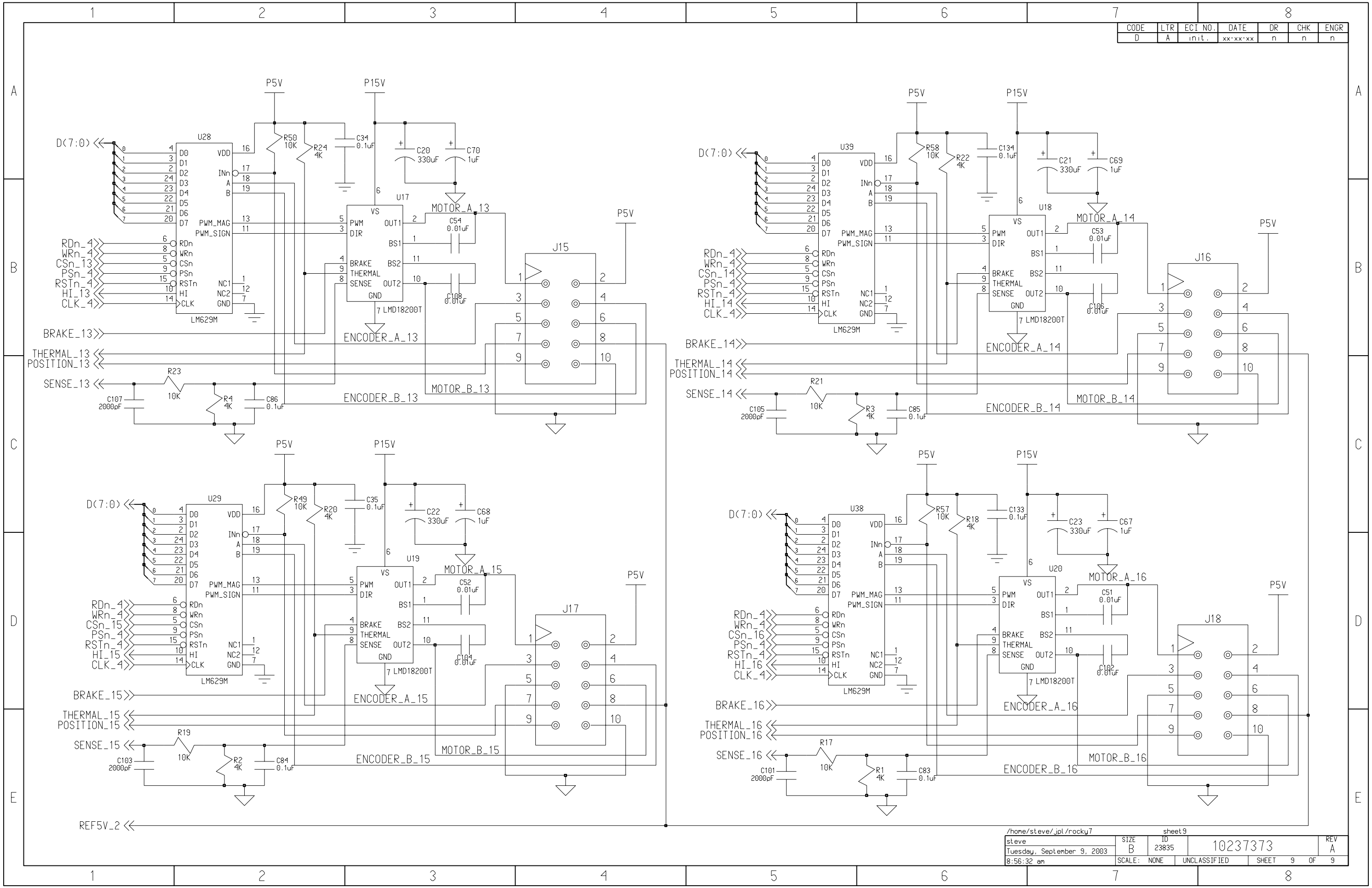

CODE LTR ECI NO. DATE DR CHK ENGR
D A init. xx-xx-xx n n n
U28
LM629M
U17
LMD18200T
U29
LM629M
U19
LMD18200T
U39
LM629M
U18
LMD18200T
U38
LM629M
U20
LMD18200T
J15
J16
J17
J18
P5V
P15V
D(7:0)
RDn_4
WRn_4
CSn_13
PSn_4
RSTn_4
HI_13
CLK_4
BRAKE_13
THERMAL_13
POSITION_13
SENSE_13
ENCODER_A_13
ENCODER_B_13
MOTOR_A_13
MOTOR_B_13
RDn_4
WRn_4
CSn_14
PSn_4
RSTn_4
HI_14
CLK_4
BRAKE_14
THERMAL_14
POSITION_14
SENSE_14
ENCODER_A_14
ENCODER_B_14
MOTOR_A_14
MOTOR_B_14
RDn_4
WRn_4
CSn_15
PSn_4
RSTn_4
HI_15
CLK_4
BRAKE_15
THERMAL_15
POSITION_15
SENSE_15
ENCODER_A_15
ENCODER_B_15
MOTOR_A_15
MOTOR_B_15
RDn_4
WRn_4
CSn_16
PSn_4
RSTn_4
HI_16
CLK_4
BRAKE_16
THERMAL_16
POSITION_16
SENSE_16
ENCODER_A_16
ENCODER_B_16
MOTOR_A_16
MOTOR_B_16
REF5V_2
/home/steve/jpl/rocky7
sheet9
steve
Tuesday, September 9, 2003
8:56:32 am
SIZE B
ID 23835
10237373
REV A
SCALE: NONE
UNCLASSIFIED
SHEET 9 OF 9