FIDO STACK 2002

(FOR CLARATY ON FIDO)

Design Files and Documentation

Path: C:\1Project\FIDO\FIDO 2002\FIDO Stack for C on F

NASA / Jet Propulsion Laboratory Pasadena, CA				
TELEROBOTICS FIDO Rover	a Cover Sheet			
Engineer M. S. Garrett mgarrett@jpl.nasa.gov	Schematic Name FIDO Interconnection Diagram			
Size A	Scale	Friday, August 30, 2002	Rev -	Sheet 1 of 10

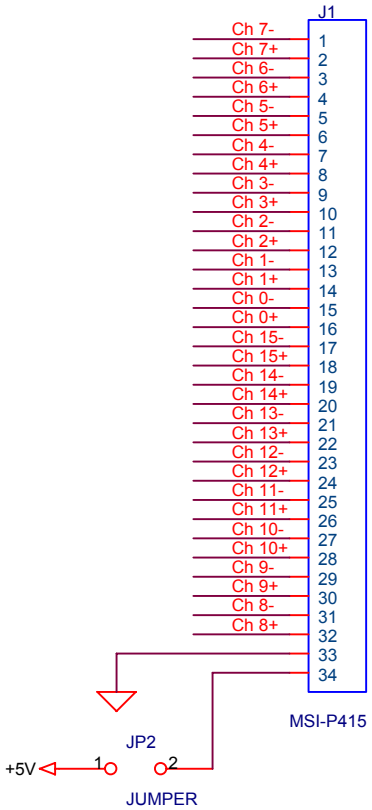

Notes:
1. Analog input is daisy chained from filter card outputs using ribbon cable.
2. Active filter card is selected at filter card using jumper.
3. Filter card output connector J2-33 and J2-34 are no connection.

Analog Input Card is MSI P415
Microcomputer Systems, Inc.
http://www.rouge.net/users/microcom/index.htm

NASA / Jet Propulsion Laboratory Pasadena, CA	
TELEROBOTICS FIDO Rover	Analog Input
Engineer M. S. Garrett mgarrett@jpl.nasa.gov	Schematic Name FIDO Interconnection Diagram
Size A / Scale / Friday, August 30, 2002 / Rev -	Sheet 2 of 10

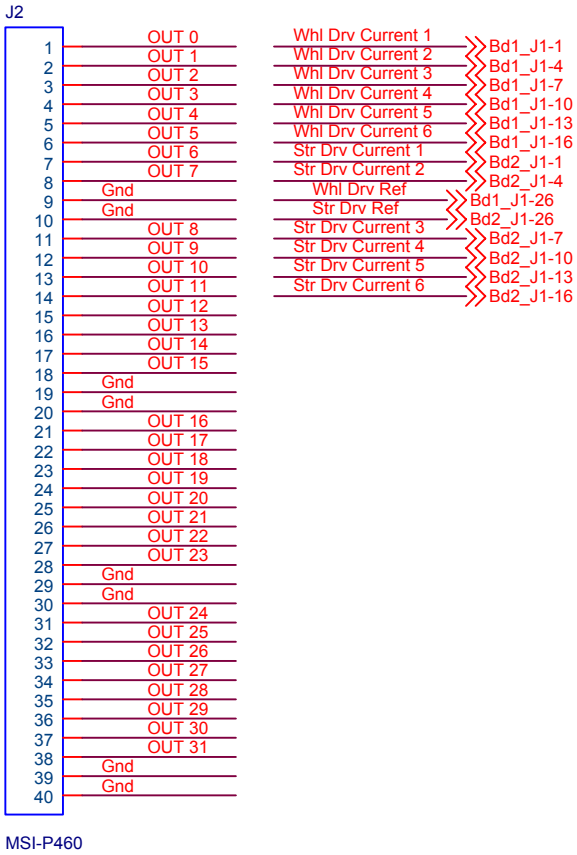


```
Analog Output Card is MSI P460
Microcomputer Systems, Inc.
http://www.rouge.net/users/microcom/index.htm
```

```
Corer    = Driver Board 5   6
Arm      = Driver Board 4   5
Mast     = Driver Board 3   4
Steering = Driver Board 2   3
Wheel    = Driver Board 1   2
                            1
```

NASA / Jet Propulsion Laboratory
Pasadena, CA

TELEROBOTICS FIDO Rover	Analog Output
Engineer M. S. Garrett mgarrett@jpl.nasa.gov	Schematic Name FIDO Interconnection Diagram

Size	Scale		Rev	
A		Friday, August 30, 2002	-	Sheet 3 of 10

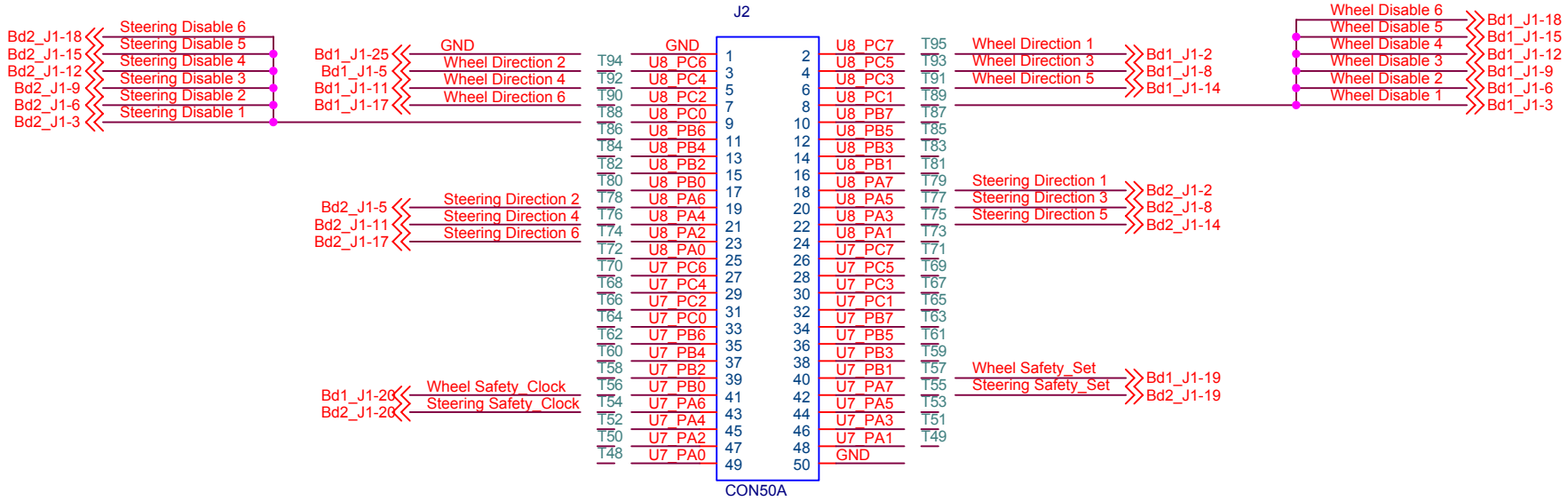


```
DIO Board is MSI P560
Microcomputer Systems, Inc.
http://www.rouge.net/users/microcom/index.htm
```

Corer	= Driver Board 5	6
Arm	= Driver Board 4	5
Mast	= Driver Board 3	4
Steering	= Driver Board 2	3
Wheel	= Driver Board 1	2
		1

NASA / Jet Propulsion Laboratory
Pasadena, CA

TELEROBOTICS FIDO Rover	Digital I/O Bd 1 Con J2
Engineer M. S. Garrett mgarrett@jpl.nasa.gov	Schematic Name FIDO Interconnection Diagram

Size	Scale		Rev	
A		Friday, August 30, 2002	-	Sheet 4 of 10

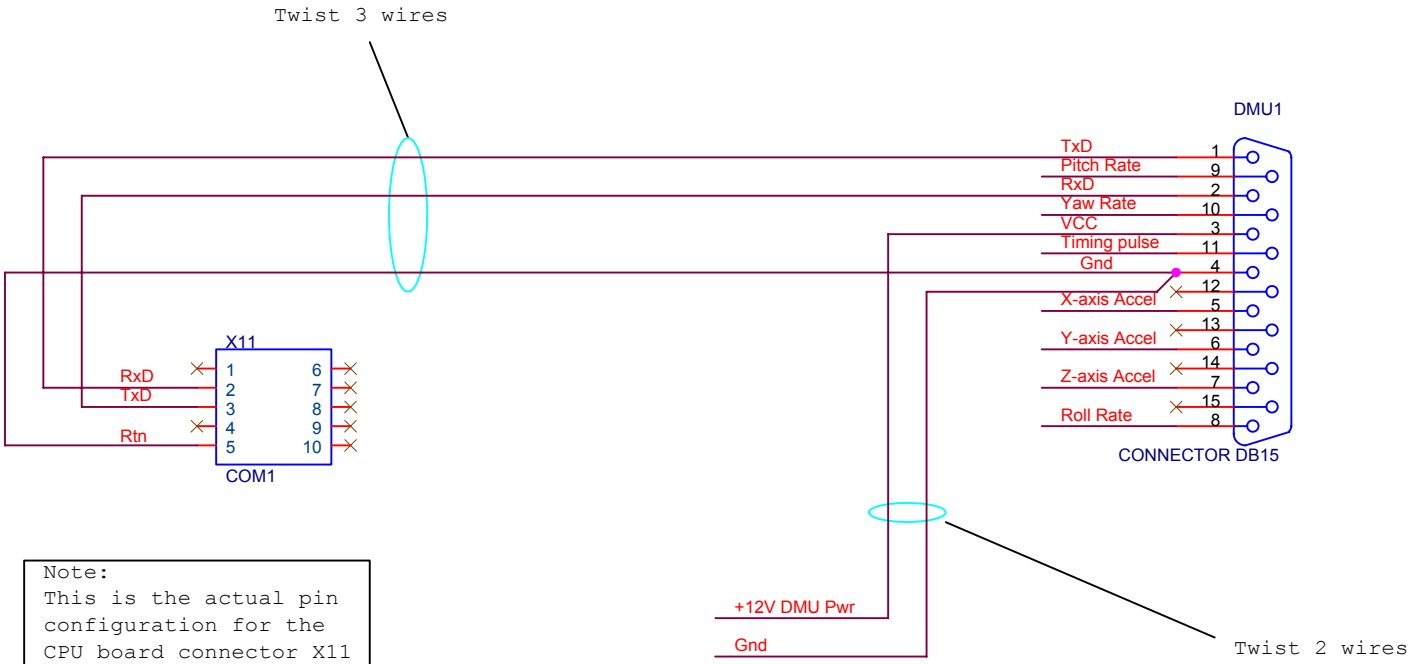

Note:
This is the actual pin configuration for the CPU board connector X11

NASA / Jet Propulsion Laboratory Pasadena, CA	
TELEROBOTICS FIDO Rover	DMU Cable
Engineer M. S. Garrett mgarrett@jpl.nasa.gov	Schematic Name FIDO Interconnection Diagram
Size A / Scale / Friday, August 30, 2002 / Rev -	Sheet 5 of 10

Input Connector

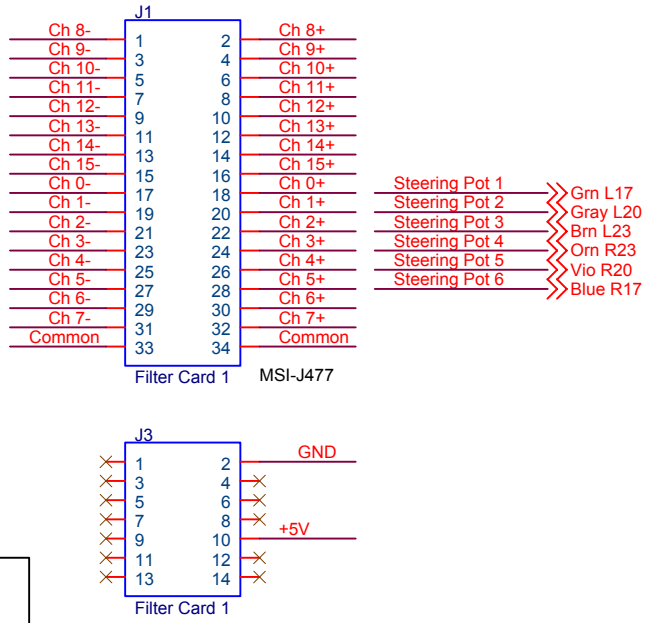

Output Connector

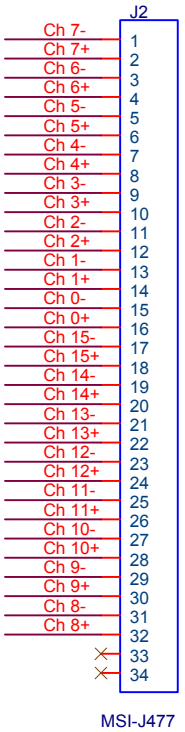

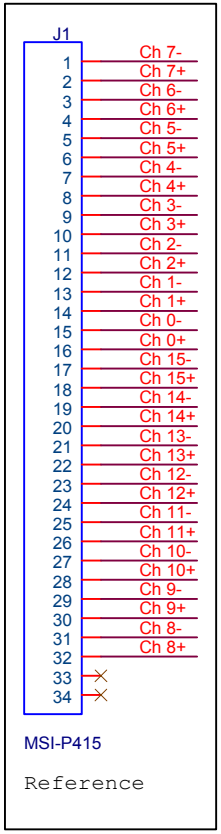

Note specific to this design only:
Only one filter board is used, so
there is no filter interface board.
Therefore enable at all times by
using no jumpers on JP1

Analog Filter / Multiplexer Card is MSI-J477
Microcomputer Systems, Inc.
http://www.rouge.net/users/microcom/index.htm

Notes:
Enable at all times - no jumper on JP1
Disable as default - jumper JP1-7 at all times
Control board - Select Board number using JP1
Signal +/- wires are to be twisted pair

NASA / Jet Propulsion Laboratory Pasadena, CA			
TELEROBOTICS FIDO Rover	Filter Card 1, 25 Hz		
Engineer M. S. Garrett mgarrett@jpl.nasa.gov	Schematic Name FIDO Interconnection Diagram		
Size A	Scale	Friday, August 30, 2002	Rev -	Sheet 6 of 10

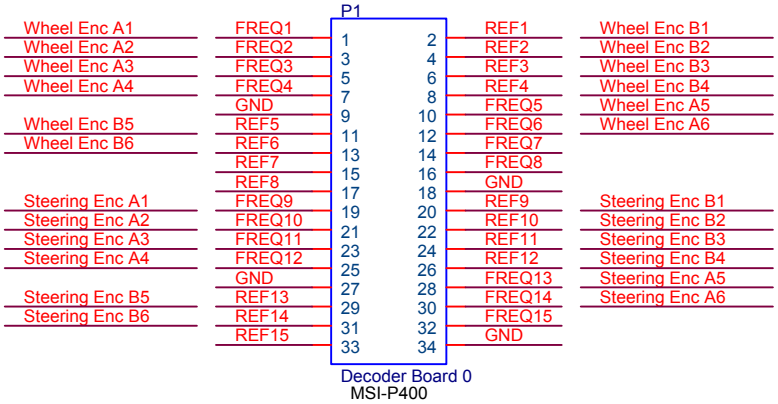


```
Quadrature Decoder / Counter Card is MSI-P400
Microcomputer Systems, Inc.
http://www.rouge.net/users/microcom/index.htm
```

NASA / Jet Propulsion Laboratory Pasadena, CA			
TELEROBOTICS FIDO Rover	Motor Decoder Board		
Engineer M. S. Garrett mgarrett@jpl.nasa.gov	Schematic Name FIDO Interconnection Diagram		
Size A	Scale	Friday, August 30, 2002	Rev -	Sheet 7 of 10

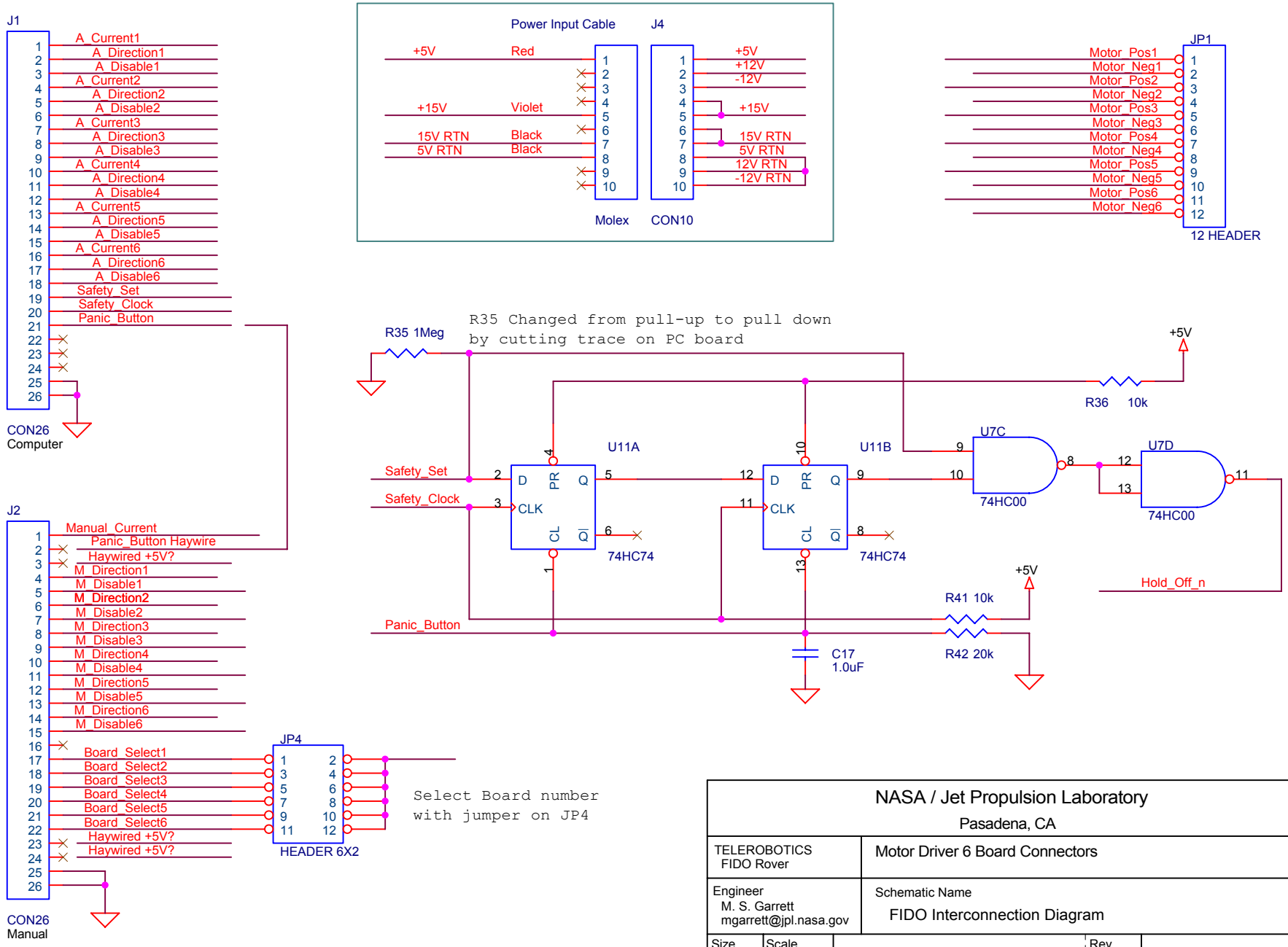

NASA / Jet Propulsion Laboratory Pasadena, CA			
TELEROBOTICS FIDO Rover	Motor Driver 6 Board Connectors		
Engineer M. S. Garrett mgarrett@jpl.nasa.gov	Schematic Name FIDO Interconnection Diagram		
Size A	Scale	Friday, August 30, 2002	Rev -	Sheet 8 of 10

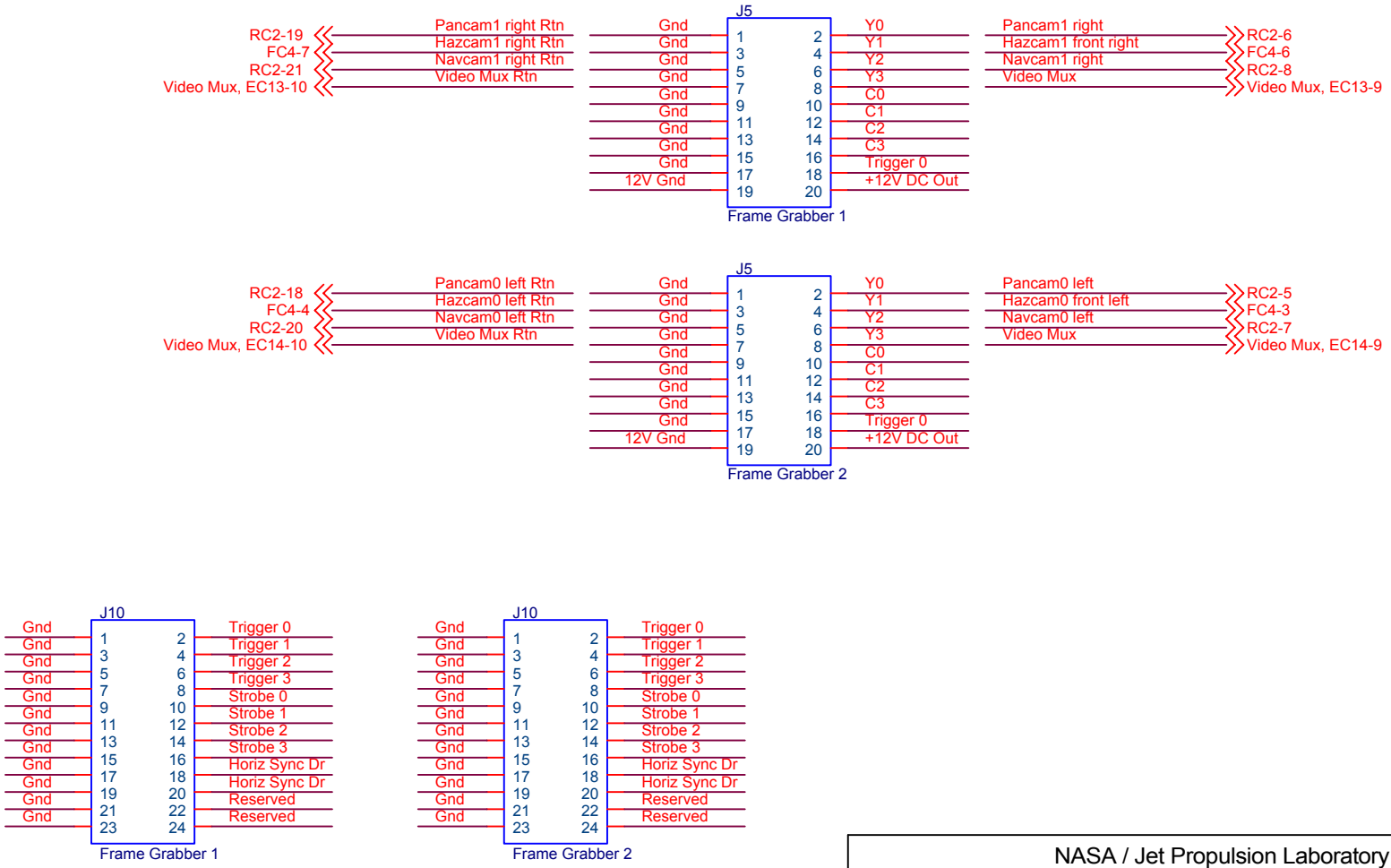

Note:
Left side is 0,
Right side is 1.

Video Frame Grabber Card is PCX200
Imagenation Corp
http://www.imagenation.com/

NASA / Jet Propulsion Laboratory Pasadena, CA			
TELEROBOTICS FIDO Rover	Video Frame Grabbers		
Engineer M. S. Garrett mgarrett@jpl.nasa.gov	Schematic Name FIDO Interconnection Diagram		
Size A	Scale	Friday, August 30, 2002	Rev -	Sheet 9 of 10

1. The Panic Button MUST be connected for the actuator driver boards to operate under computer control. They will not enable without it, and no attempt should be made to bypass or disable this function.
2. To enable the actuator driver boards: Connect Panic Button; Set "Safety Set" bit, J1 pin 19, to high; Provide 2 or more rising edges to "Safety Clock" bit, J1 pin 20.
3. The actuator driver boards may be disabled manually by pressing or disconnecting the Panic Button. The computer may disable them by reversing step 2: Clear "Safety Set" bit, J1 pin 19, to Low; Provide 2 or more rising edges to "Safety Clock" bit, J1 pin 20.

Panic Button Box

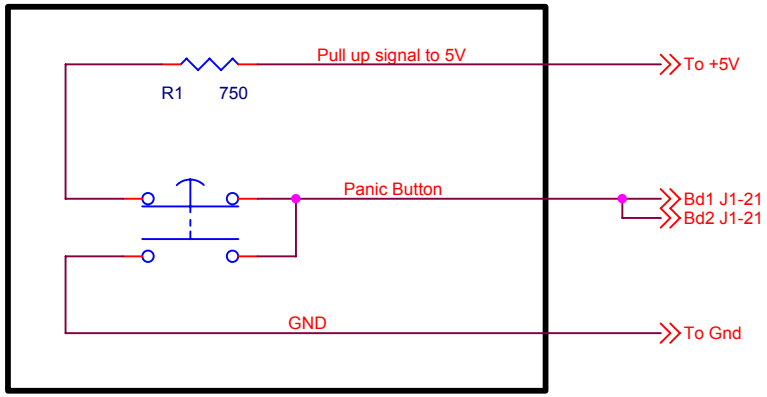

NASA / Jet Propulsion Laboratory Pasadena, CA				
TELEROBOTICS FIDO Rover	z Notes			
Engineer M. S. Garrett mgarrett@jpl.nasa.gov	Schematic Name FIDO Interconnection Diagram			
Size A	Scale	Friday, August 30, 2002	Rev -	Sheet 10 of 10