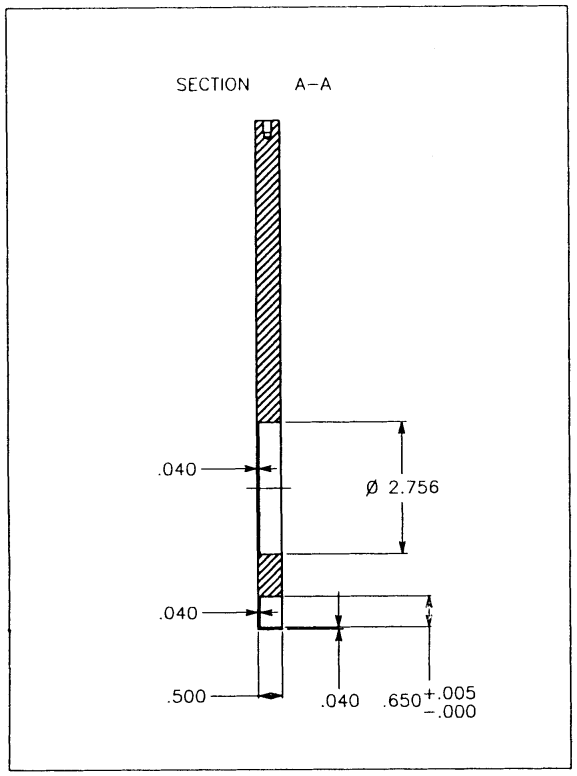

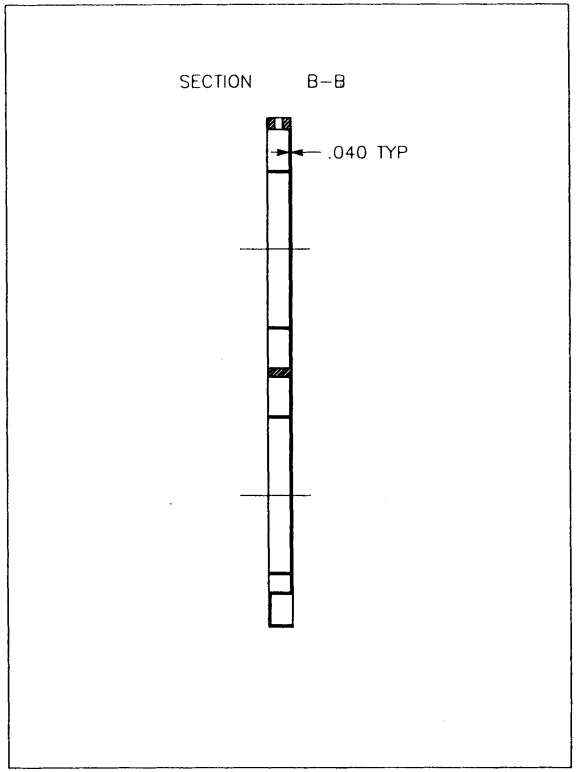

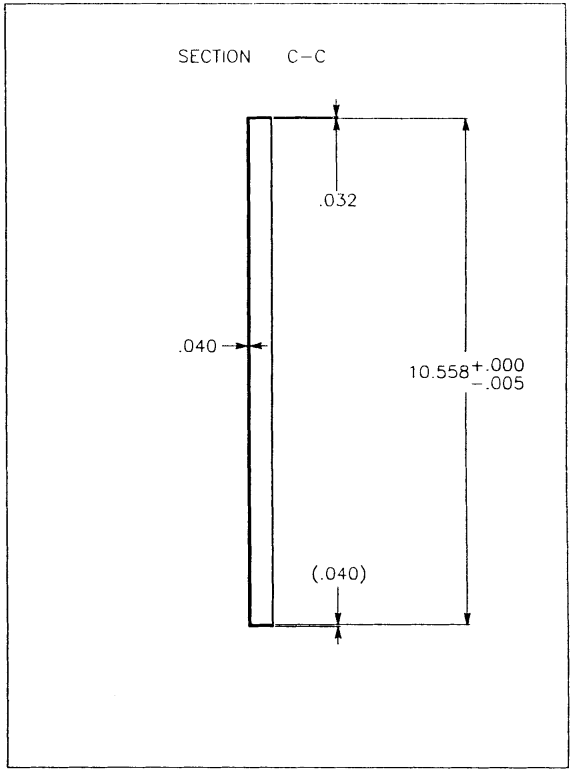

DIMENSIONS ARE IN INCHES
UNLESS OTHERWISE SPECIFIED

TOLERANCES:

FRACTIONS	DECIMALS	ANGLES
1/32	.XX = 0.015 .XXX = 0.005 .XXXX = 0.001	0.1°

JET PROPULSION LABORATORY

CALIFORNIA INSTITUTE OF TECHNOLOGY
PASADENA, CALIFORNIA

DRAWING TITLE: SIDEWALL CHASSIS

PROJECT: ET ROVER		DWG NO.: 001110-2
DRAWN: TONY GANINO 393-1363	DATE: 10/26/98	REV: C
SCALE: 1:4	MATERIAL: AL 7075-T7351	QUANTITY: 2