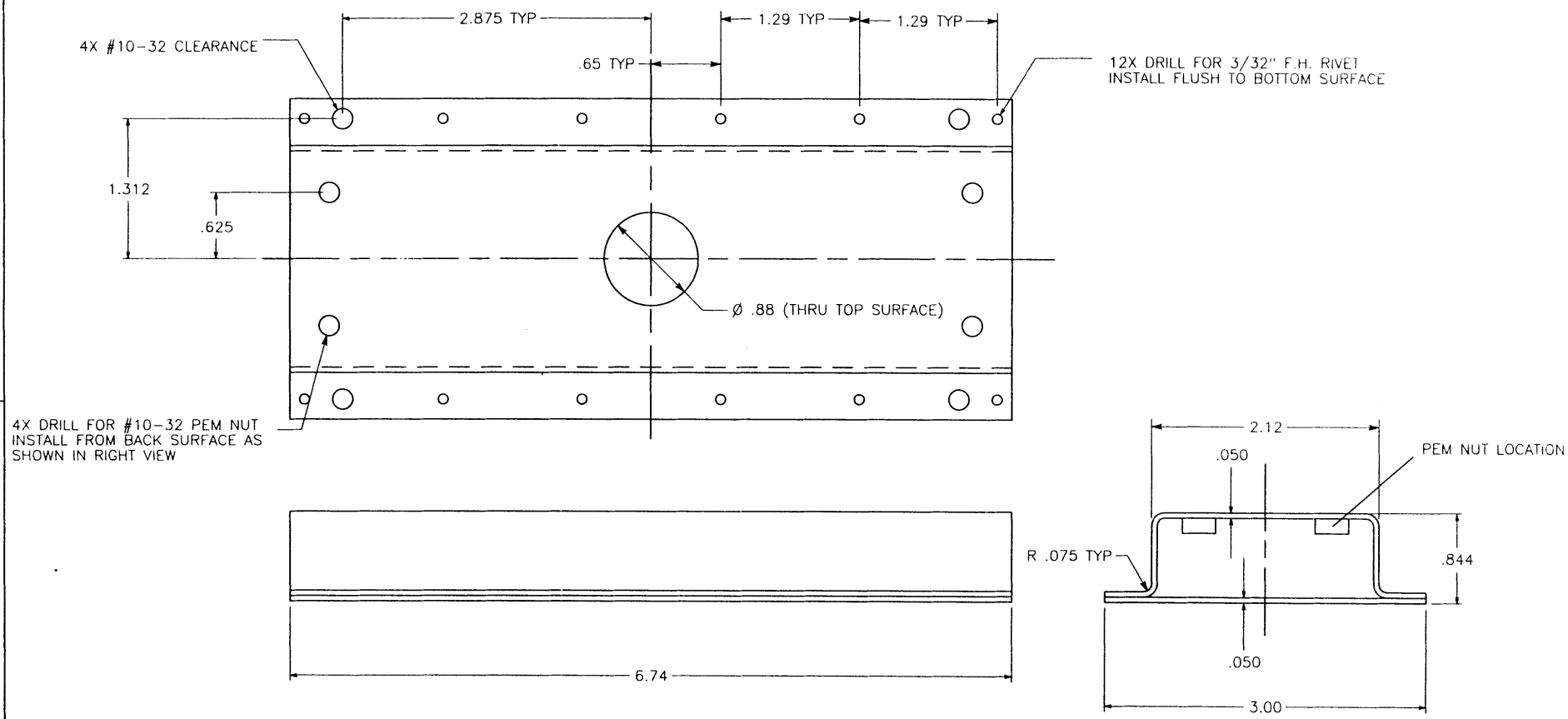


JET PROPULSION LABORATORY

CALIFORNIA INSTITUTE OF TECHNOLOGY
PASADENA, CALIFORNIA

DIMENSIONS ARE IN INCHES
UNLESS OTHERWISE SPECIFIED

TOLERANCES:

| FRACTIONS | DECIMALS | ANGLES |
|---|---|---|
| 1/32 | .XX = 0.015<br>.XXX = 0.005<br>.XXXX = 0.001 | 0.1° |

DRAWING TITLE: DIFFERENTIAL STANDOFF CHASSIS

| | | |
|---|---|---|
| PROJECT: ET ROVER | | DWG NO.: 001122-0 |
| DRAWN: TONY GANINO 393-1363 | DATE: 12/8/98 | REV: B |
| SCALE: None | MATERIAL: AL 6061-T6 | QUANTITY: 1 |