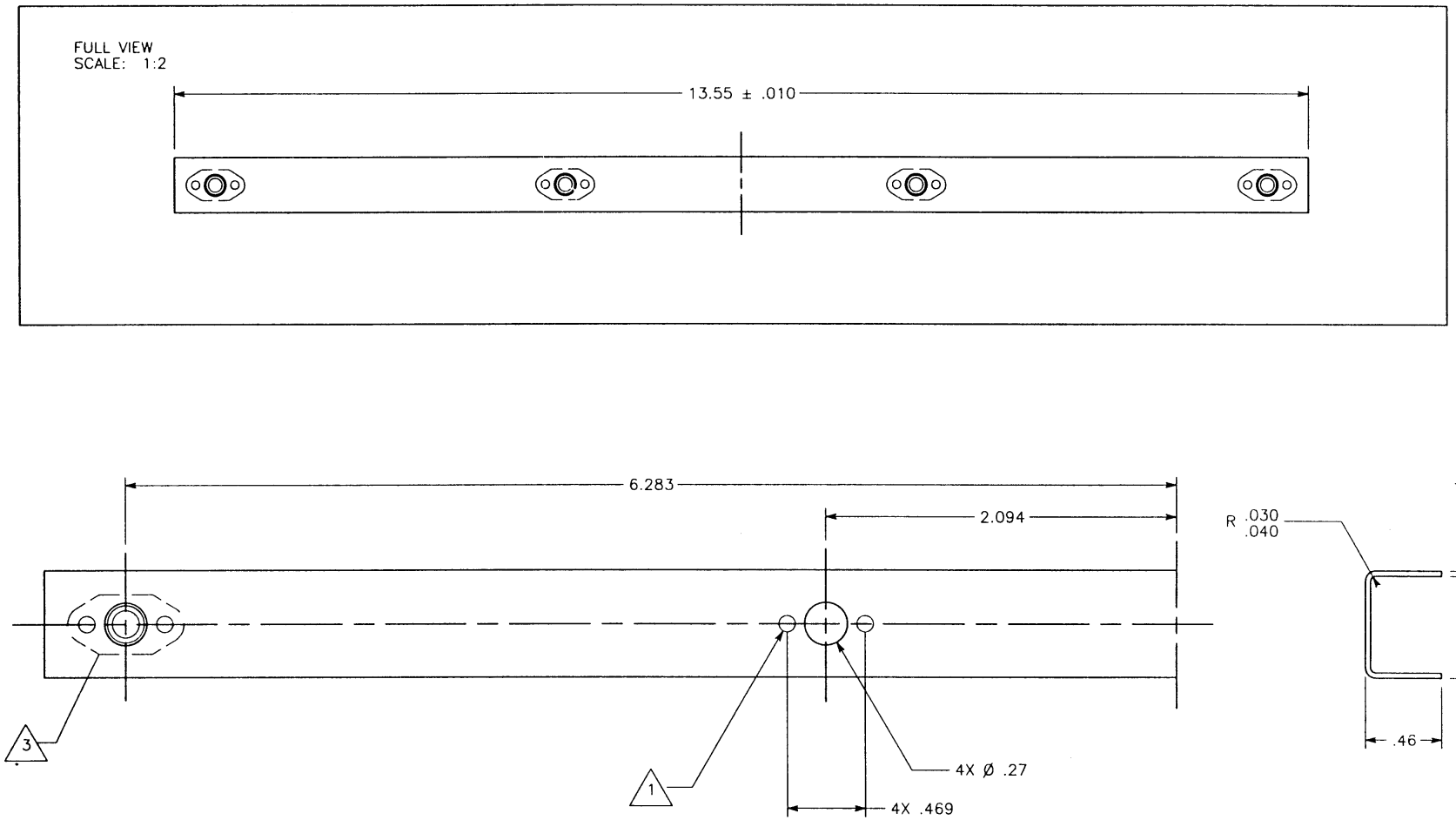

3	INSTALL #8-32 RIVETTED FLOATING NUTS (PN MS21076L08) INSIDE CHANNEL IN 4 PLACES
2	ALODINE GOLD PER MIL-C-5541 CLASS IA PRIOR TO ASSEMBLY OF RIVETTED NUTS
1	DRILL AND COUNTERSINK FOR FLATHEAD RIVETS MOUNTED FLUSH TO OUTER SURFACE IN 4X 2 PLACES

NOTES

DIMENSIONS ARE IN INCHES UNLESS OTHERWISE SPECIFIED

TOLERANCES:

FRACTIONS	DECIMALS	ANGLES
1/32	.XX = 0.015 .XXX = 0.005 .XXXX = 0.001	0.1°

JET PROPULSION LABORATORY

CALIFORNIA INSTITUTE OF TECHNOLOGY
PASADENA, CALIFORNIA

DRAWING TITLE:
FRONT/TOP PANEL CLOSEOUT
FRONT(REAR) PANEL SUBASSEMBLY

PROJECT: ET ROVER		DWG NO.: 001126-0
DRAWN: TONY GANINO 393-1363	DATE: 7/14/98	REV: C
SCALE: FULL	MATERIAL: AL 5052	QUANTITY: 2