Mods to diff
12/98

SECTION A-A

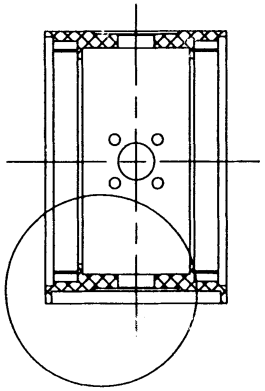

SEE EXPLODED VIEW

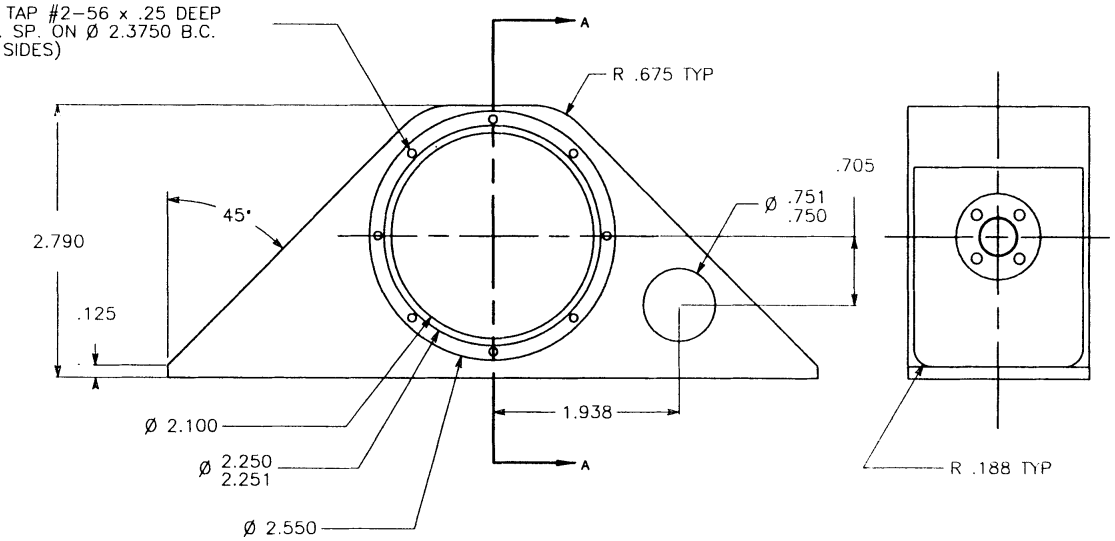

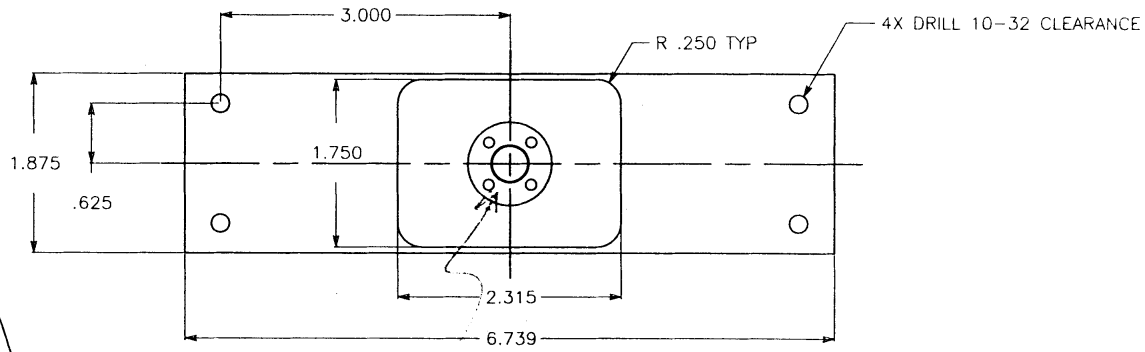

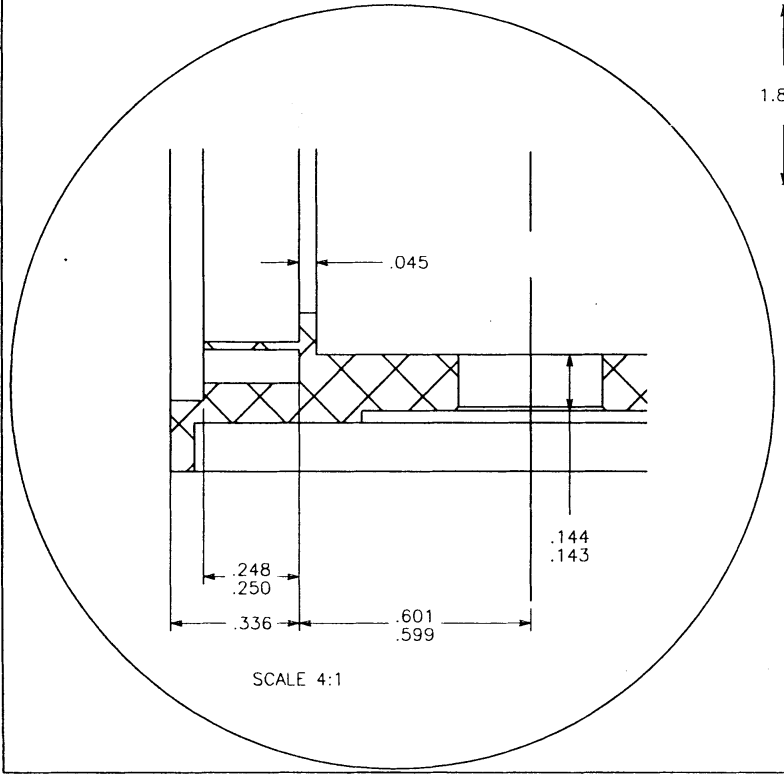

SCALE 4:1

ADD MODIFICATIONS

1	SEE SHEET 2 (DWG 001610-2) FOR REMAINING DIMENSIONS
NOTES	

JET PROPULSION LABORATORY

CALIFORNIA INSTITUTE OF TECHNOLOGY
PASADENA, CALIFORNIA

DIMENSIONS ARE IN INCHES
UNLESS OTHERWISE SPECIFIED

TOLERANCES:

FRACTIONS	DECIMALS	ANGLES
1/32	.XX = 0.015 .XXX = 0.005 .XXXX = 0.001	0.1°

DRAWING TITLE: HOUSING DIFFERENTIAL

PROJECT: ET ROVER		DWG NO.: 001610-1
DRAWN: TONY GANINO 393-1363	DATE: 12/8/98	REV: C
SCALE: HALF	MATERIAL: AL 7075-T6	QUANTITY: 1