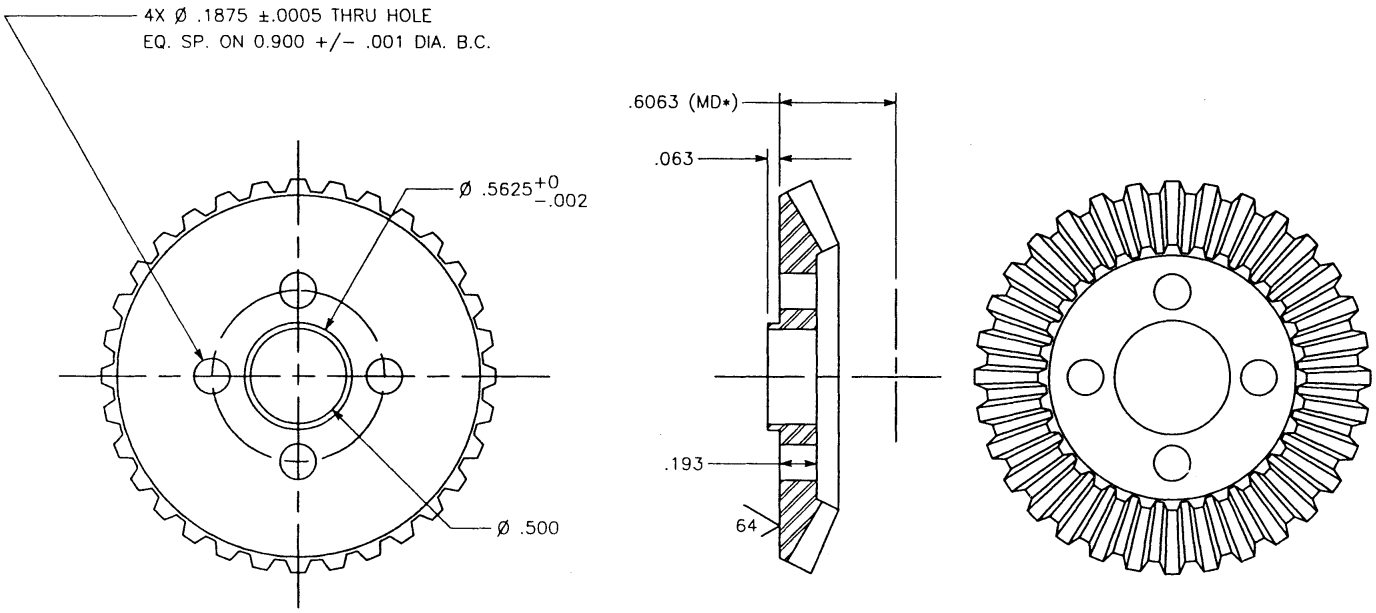

BASIC GEAR: HL−149Y−G
MATERIAL: HARDENED 1117 STEEL (R15N 89−91)
DIAM. PITCH: 16
NO. TEETH: 32
PITCH DIAM.: 2.000"
FACE WIDTH: .36"

DIMENSIONS ARE IN INCHES
UNLESS OTHERWISE SPECIFIED

TOLERANCES:

FRACTIONS	DECIMALS	ANGLES
1/32	.XX = 0.015 .XXX = 0.005 .XXXX = 0.001	0.1°

JET PROPULSION LABORATORY

CALIFORNIA INSTITUTE OF TECHNOLOGY
PASADENA, CALIFORNIA

DRAWING TITLE: INPUT BEVEL GEAR DIFFERENTIAL

PROJECT: ET ROVER	DWG NO.: 001613−0	
DRAWN: TONY GANINO (818) 393−1363	DATE: 8/3/98	REV: B
SCALE: None	MATERIAL: 11L17 (SEE NOTE)	QUANTITY: 2