SECTION A-A

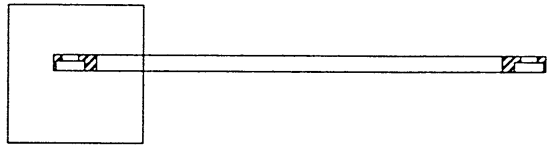

SEE
EXPLODED
VIEW

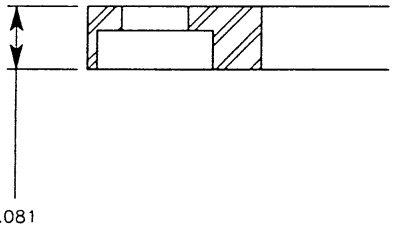

SCALE: 4:1

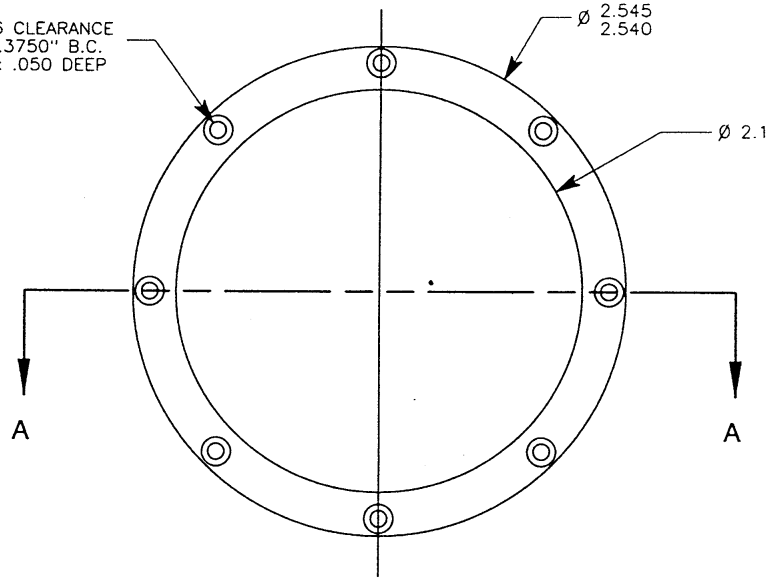

JET PROPULSION LABORATORY

CALIFORNIA INSTITUTE OF TECHNOLOGY
PASADENA, CALIFORNIA

DIMENSIONS ARE IN INCHES
UNLESS OTHERWISE SPECIFIED

TOLERANCES:

FRACTIONS	DECIMALS	ANGLES
1/32	.XX = 0.015 .XXX = 0.005 .XXXX = 0.001	0.1°

DRAWING TITLE: CAPTURE RING DIFFERENTIAL

PROJECT: ET ROVER		DWG NO.: 001614-0
DRAWN: TONY GANINO 393-1363	DATE: 8/3/98	REV: A
SCALE: FULL	MATERIAL: AL 7075-T7351	QUANTITY: 2