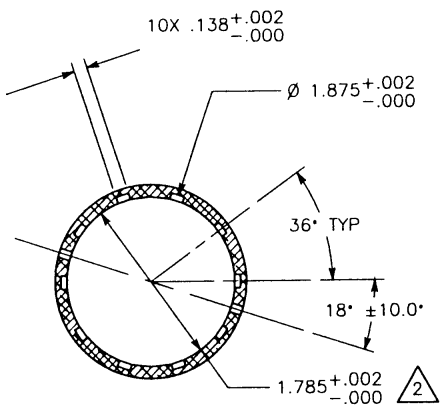

SECTION B–B

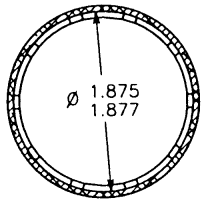

SECTION C–C

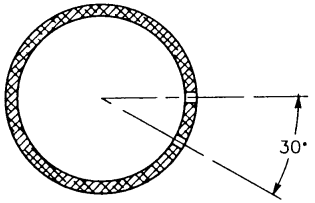

SECTION D–D

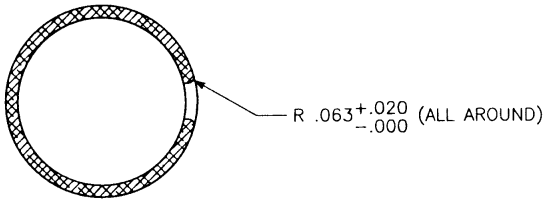

SECTION E–E

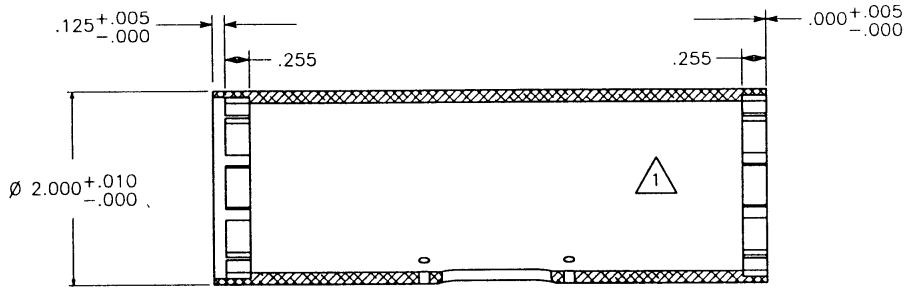

SECTION A–A

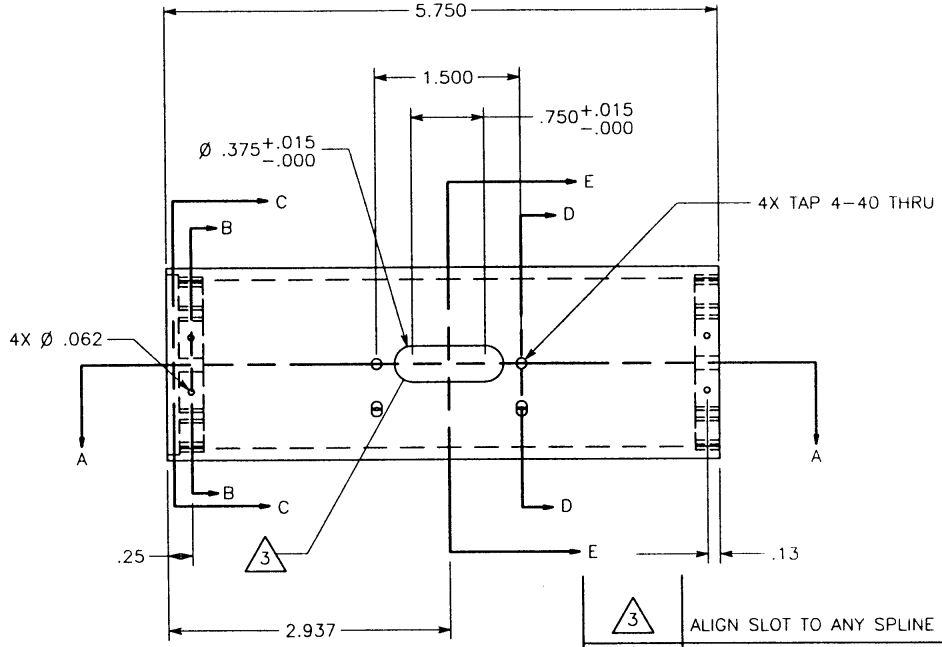

3	ALIGN SLOT TO ANY SPLINE TO WITHIN ±5°
2	SKIM I.D. OVER LENGTH OF SPLINE TO REMOVE MANUFACTURING TOLERANCE
1	USE 2 x 1.75 x .125 WALL, AL 6061–T6 TUBING AND USE AS SUPPLIED

NOTES

JET PROPULSION LABORATORY

CALIFORNIA INSTITUTE OF TECHNOLOGY
PASADENA, CALIFORNIA

DIMENSIONS ARE IN INCHES
UNLESS OTHERWISE SPECIFIED

TOLERANCES:

FRACTIONS	DECIMALS	ANGLES
1/32	.XX = 0.015 .XXX = 0.005 .XXXX = 0.001	0.1°

DRAWING TITLE:
INSTRUMENTED JEFF TUBE
INST. JEFF TUBE SUBASSEMBLY

PROJECT: ET ROVER		DWG NO.: 001711–0
DRAWN: TONY GANINO 393–1363	DATE: 8/13/98	REV: C
SCALE: HALF	MATERIAL: SEE NOTE	QUANTITY: 1