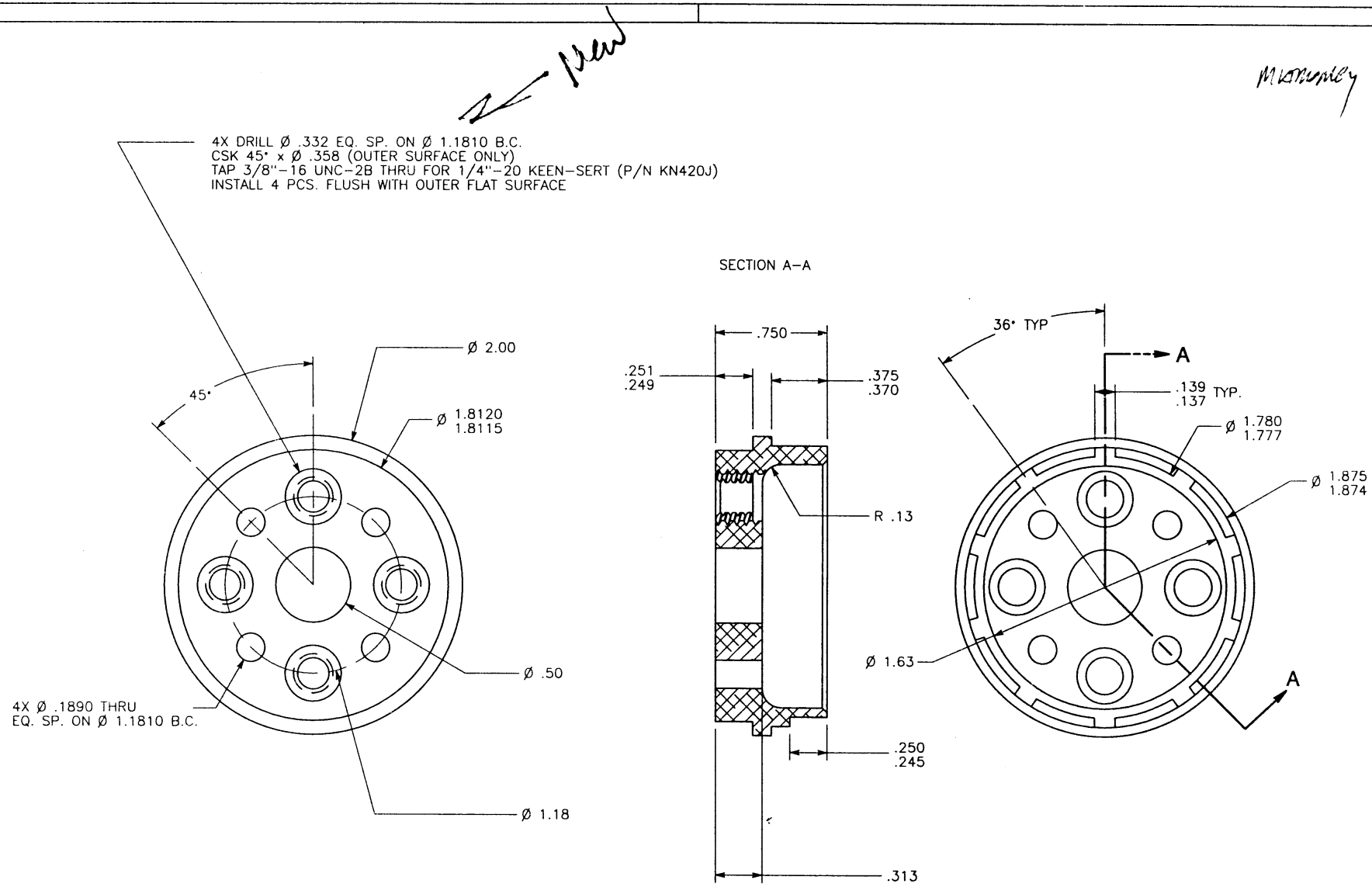

JET PROPULSION LABORATORY

CALIFORNIA INSTITUTE OF TECHNOLOGY
PASADENA, CALIFORNIA

DIMENSIONS ARE IN INCHES
UNLESS OTHERWISE SPECIFIED

TOLERANCES:

FRACTIONS	DECIMALS	ANGLES
1/32	.XX = 0.015 .XXX = 0.005 .XXXX = 0.001	0.1°

DRAWING TITLE: INTERFACE – ROCKER SIDE JEFF TUBE

PROJECT: ET ROVER	DWG NO.: 001713-0	
DRAWN: TONY GANINO 393-1363	DATE: 8/27/98	REV: B
SCALE: FULL	MATERIAL: AL 7075-T6	QUANTITY: 2

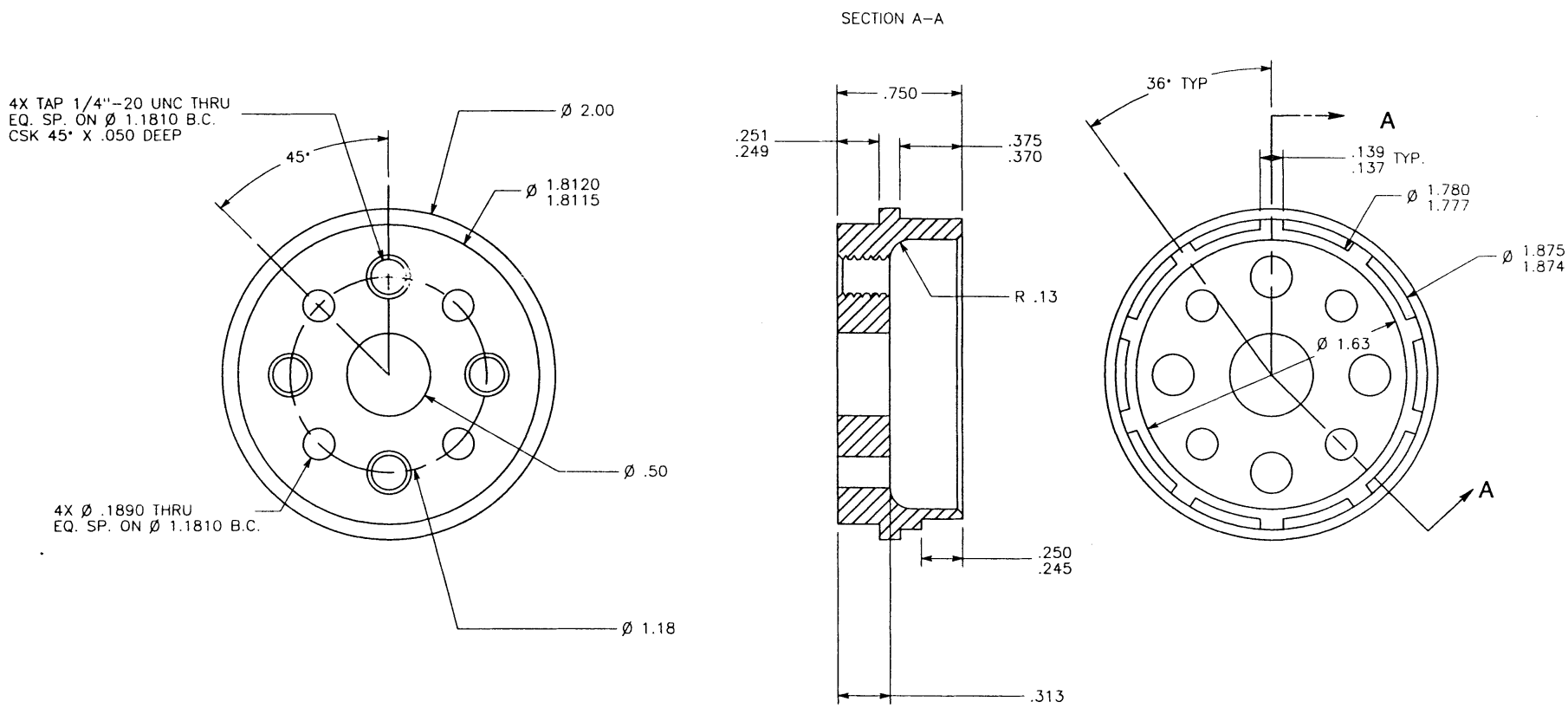

JET PROPULSION LABORATORY

CALIFORNIA INSTITUTE OF TECHNOLOGY
PASADENA, CALIFORNIA

DIMENSIONS ARE IN INCHES
UNLESS OTHERWISE SPECIFIED

TOLERANCES:

FRACTIONS	DECIMALS	ANGLES
1/32	.XX = 0.015 .XXX = 0.005 .XXXX = 0.001	0.1°

DRAWING TITLE:
INTERFACE – ROCKER SIDE
JEFF TUBE

PROJECT: ET ROVER		DWG NO.: 001713-0
DRAWN: TONY GANINO 393-1363	DATE: 8/3/98	REV: A
SCALE: FULL	MATERIAL: AL 7075-T6	QUANTITY: 2