REV. B 9/3/98

3112 – ELBOW ROTOR

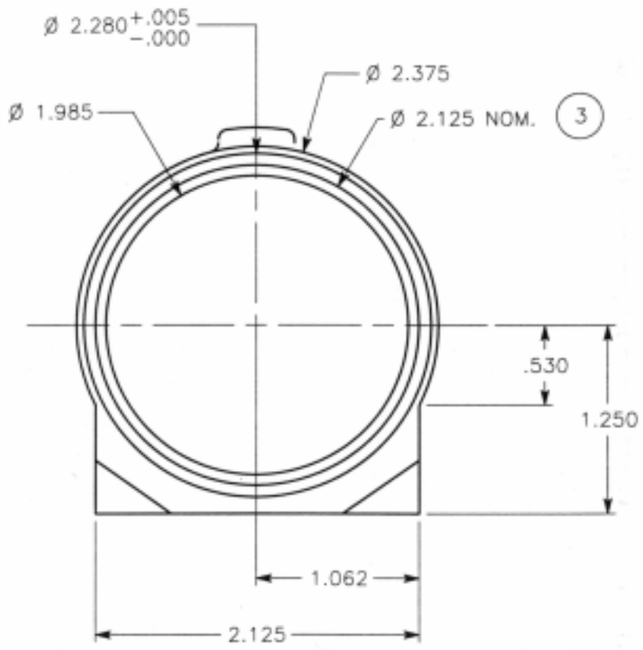


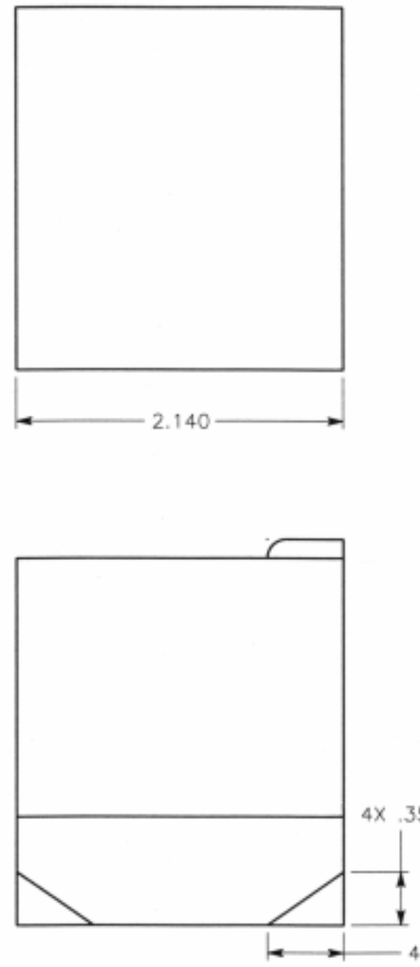


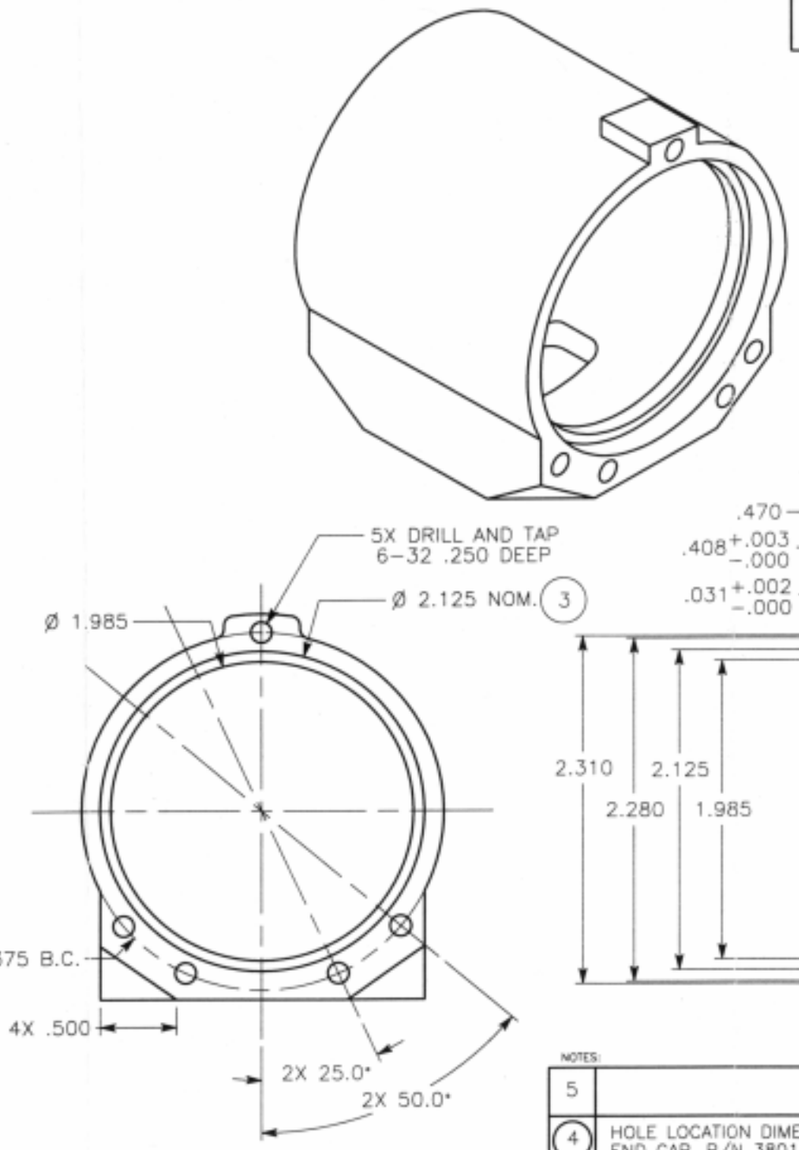


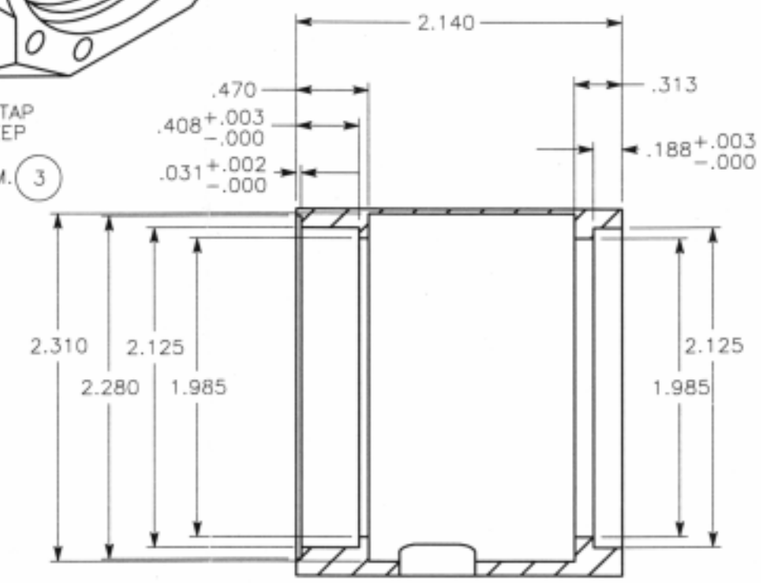


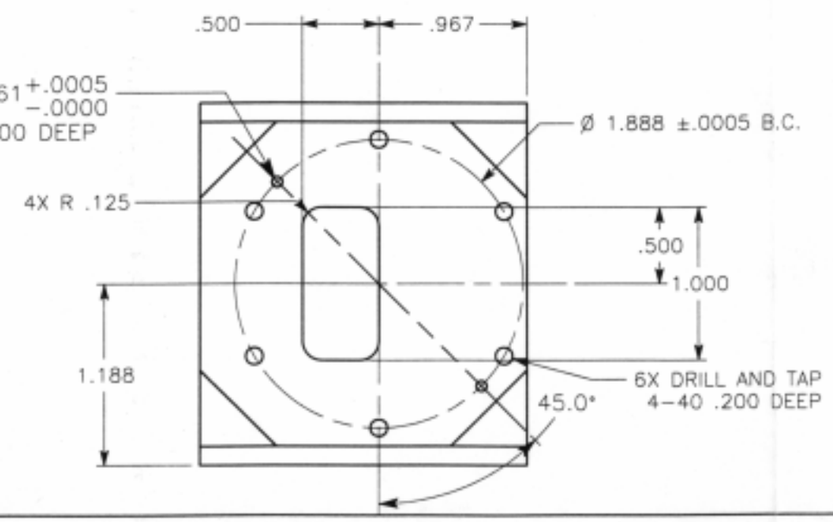


NOTES:

| | |
|---|---|
| 5 | |
| 4 | HOLE LOCATION DIMENSIONS SHOWN AS NOMINAL – TO BE SLIP FIT WITH LINK END CAP, P/N 3801, PROVIDED |
| 3 | DIMENSION SHOWN AS NOMINAL. TO BE SLIP FIT TO BEARING, P/N KA117AG0, PROVIDED |
| 2 | BREAK ALL EDGES .005–.008 UNLESS OTHERWISE SPECIFIED |
| 1 | ALL DIMENSION TOLERANCES +/–.003 UNLESS OTHERWISE SPECIFIED |

| | | |
|---|---|---|
| MATERIAL: AL 7075–T7 | QUANTITY: 4 | UNITS: INCHES |
| DRAWN BY: CHRIS VOORHEES | CONTACT: (818) 354–7994 | |
| ASSEMBLY: ELBOW PITCH ASSY. | DWG. NAME: ELBOW ROTOR | |
| SYSTEM: FIDO INSTRUMENT ARM | DWG. NUMBER: 3112 | |