REV. B 9/2/98

3113 – ELBOW STATOR

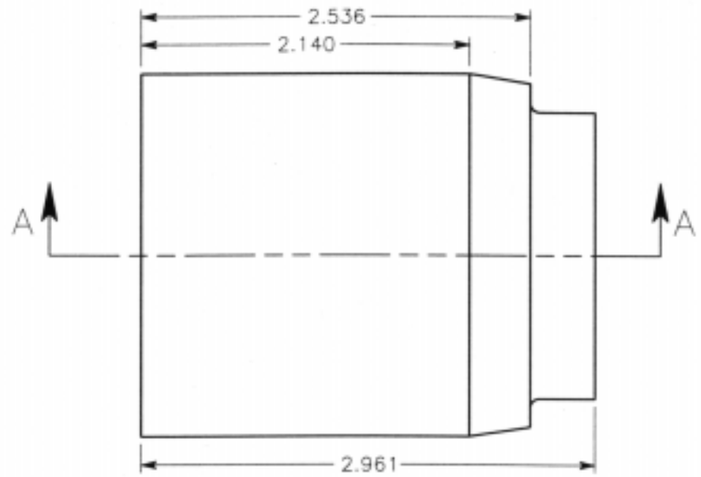

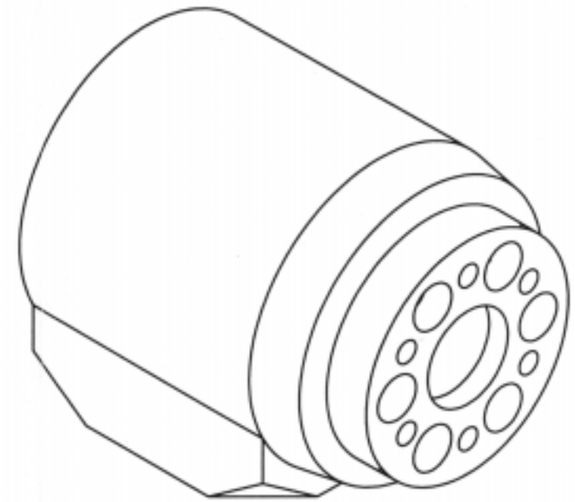

SECTION A–A

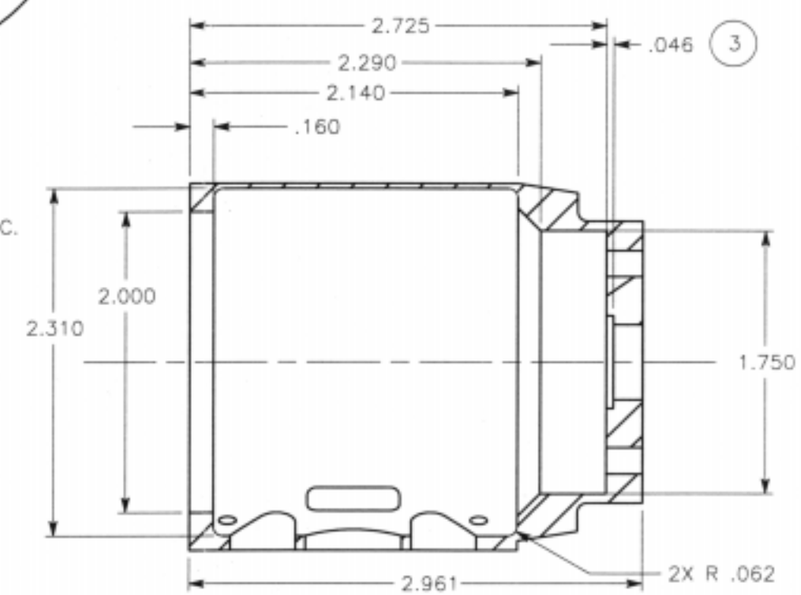

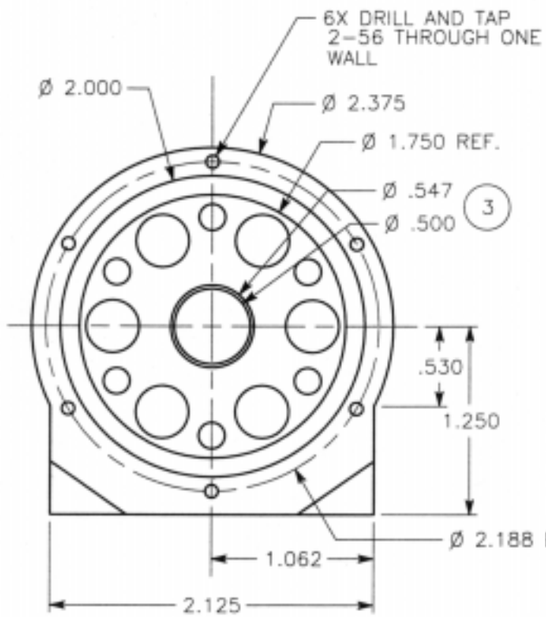

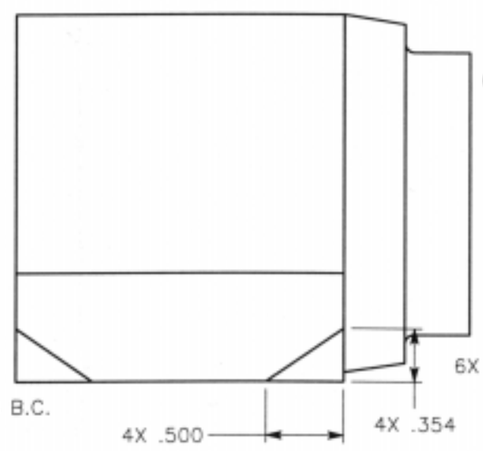

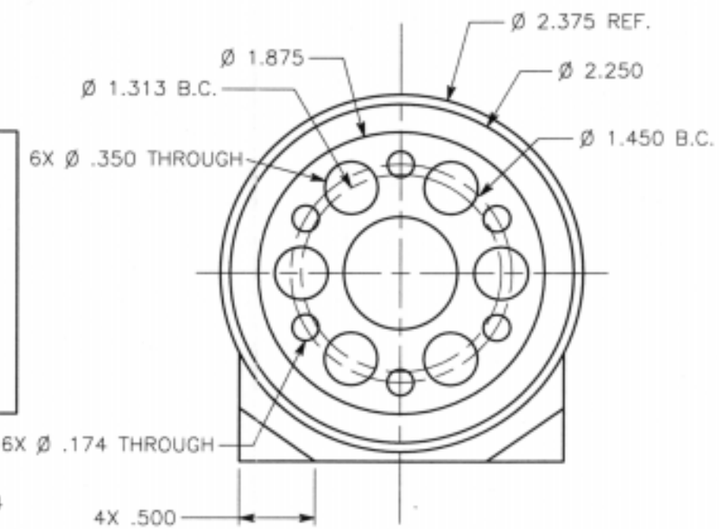

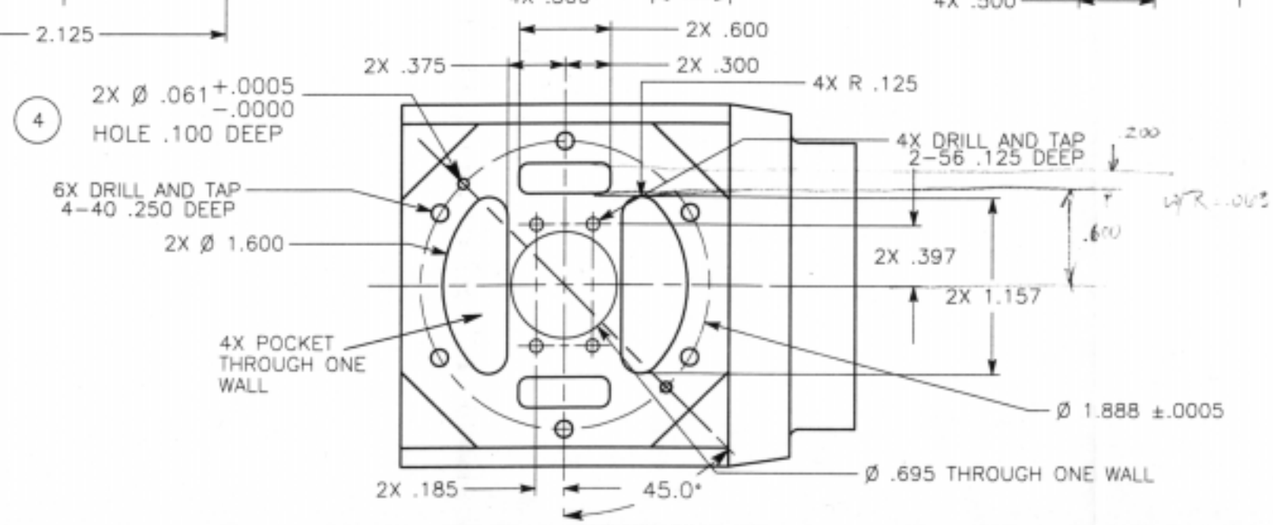

NOTES:

5	
4	HOLE LOCATION DIMENSIONS SHOWN AS NOMINAL – TO BE SLIP FIT WITH LINK END CAP, P/N 3801, PROVIDED
3	DIMENSIONS NOMINAL FOR LIGHT PRESS FIT OF BEARING PROVIDED
2	BREAK ALL EDGES .005–.008 UNLESS OTHERWISE SPECIFIED
1	ALL DIMENSION TOLERANCES +/–.003 UNLESS OTHERWISE SPECIFIED

MATERIAL: AL 7075–T7	QUANTITY: 3	UNITS: INCHES
DRAWN BY: CHRIS VOORHEES	CONTACT: (818) 354–7994	
ASSEMBLY: ELBOW PITCH ASSY.	DWG. NAME: ELBOW STATOR	
SYSTEM: FIDO INSTRUMENT ARM	DWG. NUMBER: 3113	