REV. B 9/3/98

3115 – ELBOW STATOR END CAP

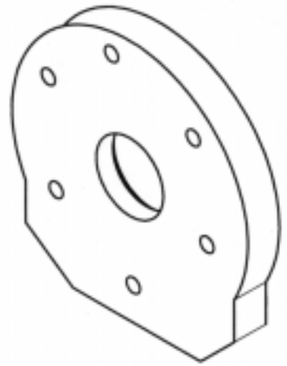

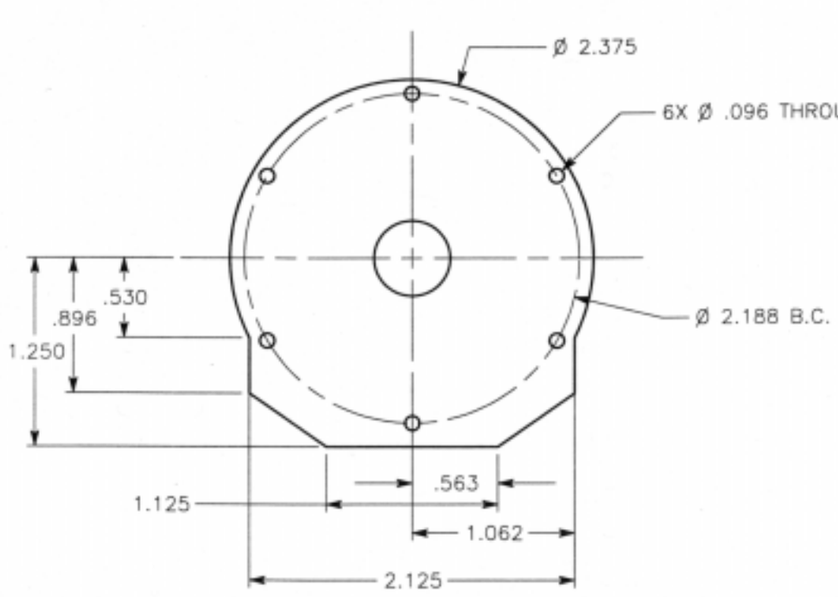

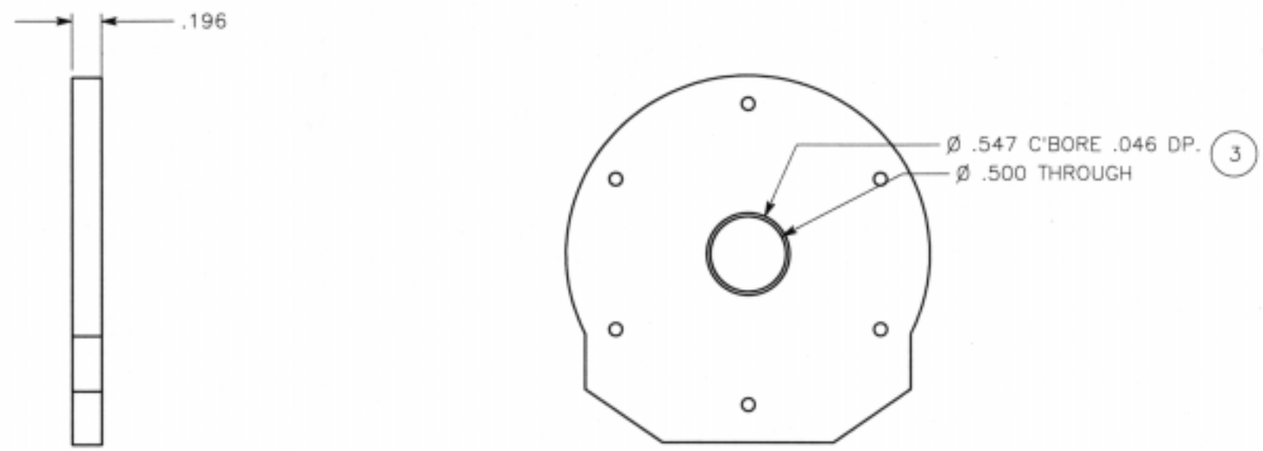

NOTES:

5	
4	
3	DIMENSIONS NOMINAL FOR LIGHT PRESS FIT OF BEARING PROVIDED
2	BREAK ALL EDGES .005–.008 UNLESS OTHERWISE SPECIFIED
1	ALL DIMENSION TOLERANCES +/–.003 UNLESS OTHERWISE SPECIFIED

MATERIAL: AL 7075–T7	QUANTITY: 4	UNITS: INCHES
DRAWN BY: CHRIS VOORHEES	CONTACT: (818) 354–7994	
ASSEMBLY: ELBOW PITCH ASSY.	DWG. NAME: ELBOW STATOR END CAP	
SYSTEM: FIDO INSTRUMENT ARM	DWG. NUMBER: 3115	