3116 – ARM ELBOW SHAFT

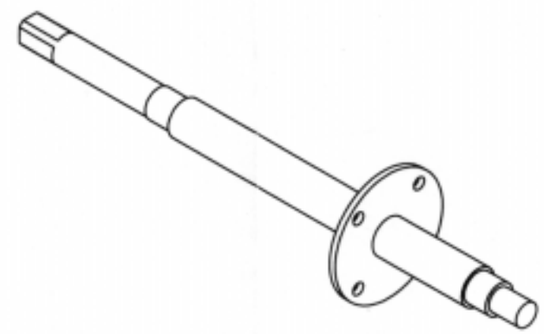

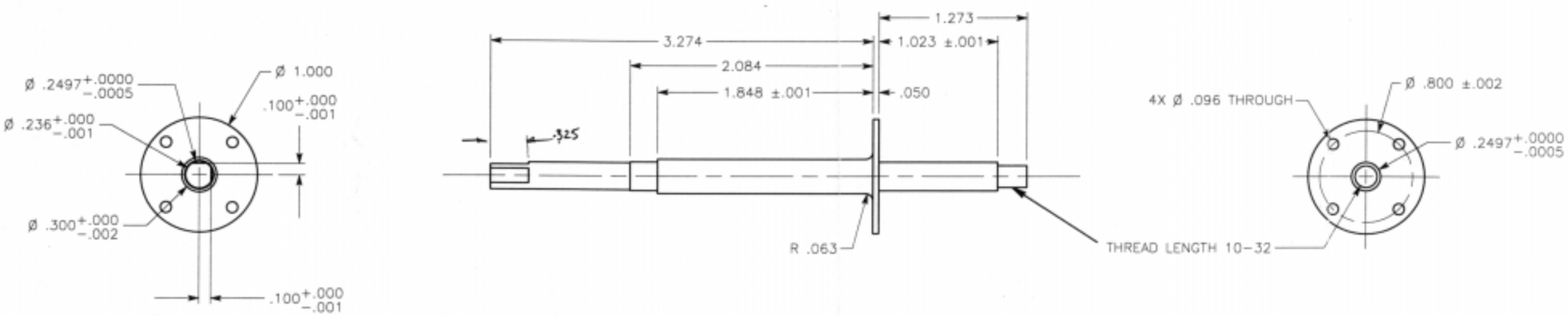

NOTES:

5	
4	
3	
2	BREAK ALL EDGES .005–.008 UNLESS OTHERWISE SPECIFIED
1	ALL DIMENSION TOLERANCES +/–.003 UNLESS OTHERWISE SPECIFIED

MATERIAL: 300 SERIES CRES	QUANTITY: 3	UNITS: INCHES
DRAWN BY: CHRIS VOORHEES	CONTACT: (818) 354–7994	
ASSEMBLY: ELBOW PITCH ASSY.	DWG. NAME: ARM ELBOW SHAFT	
SYSTEM: FIDO INSTRUMENT ARM	DWG. NUMBER: 3116	