REV. C 8/27/98

3501 – WRIST HOUSING

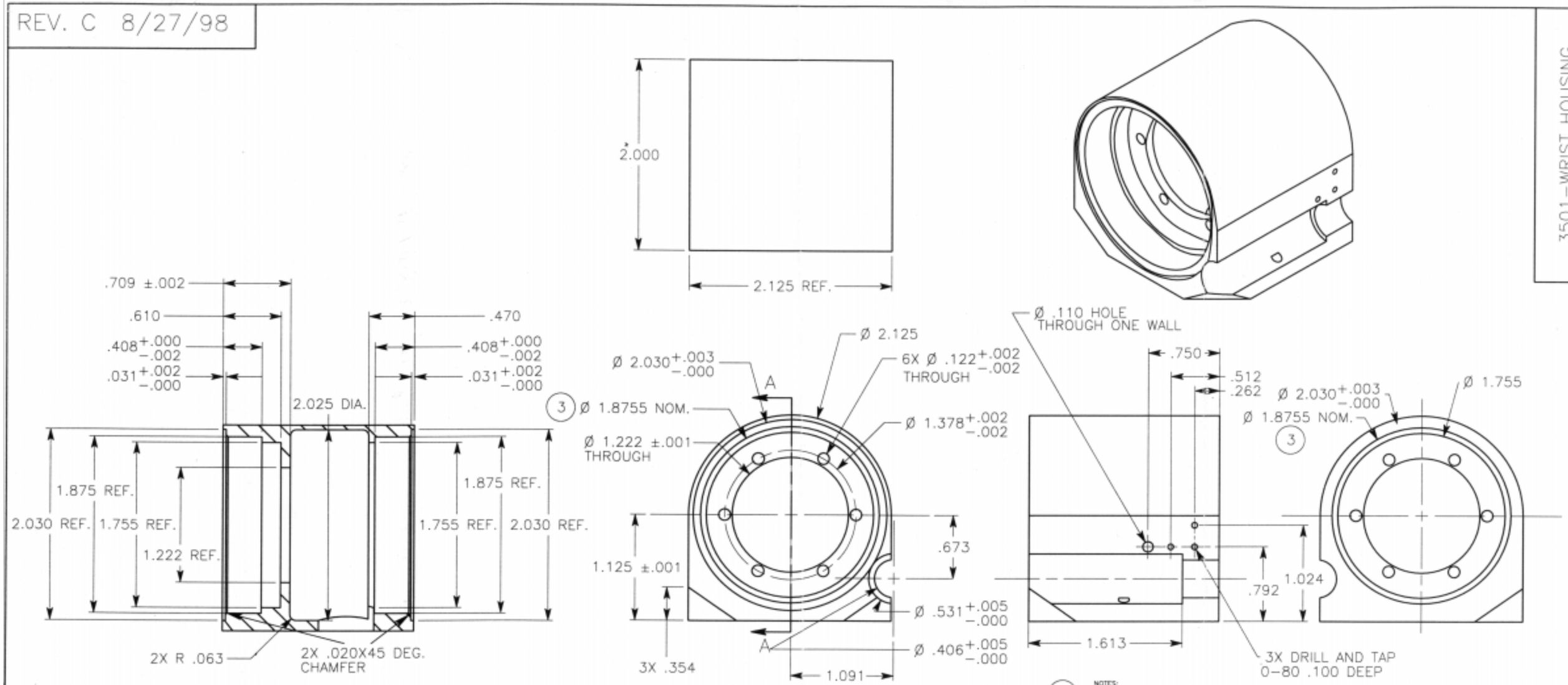

NOTES:	
5	
4	HOLE LOCATION DIMENSIONS SHOWN AS NOMINAL – TO BE SLIP FIT WITH LINK END CAP, P/N 3801, PROVIDED
3	DIMENSION SHOWN AS NOMINAL. MACHINE FOR SLIP FIT OF BEARING PROVIDED, KAYDON #KAA15AGO
2	BREAK ALL EDGES .005–.008 UNLESS OTHERWISE SPECIFIED
1	ALL DIMENSION TOLERANCES +/–.005 UNLESS OTHERWISE SPECIFIED

MATERIAL: PROVIDED	QUANTITY: X 6	UNITS: INCHES
DRAWN BY: CHRIS VOORHEES	CONTACT: (818) 354–7994	
ASSEMBLY: WRIST ASSEMBLY	DWG. NAME: WRIST HOUSING	
PROJECT: FIDO NAVIGATION MAST	DWG. NUMBER: 3501	