REV. B 8/27/98

3503-LEFT YOKE STRUT

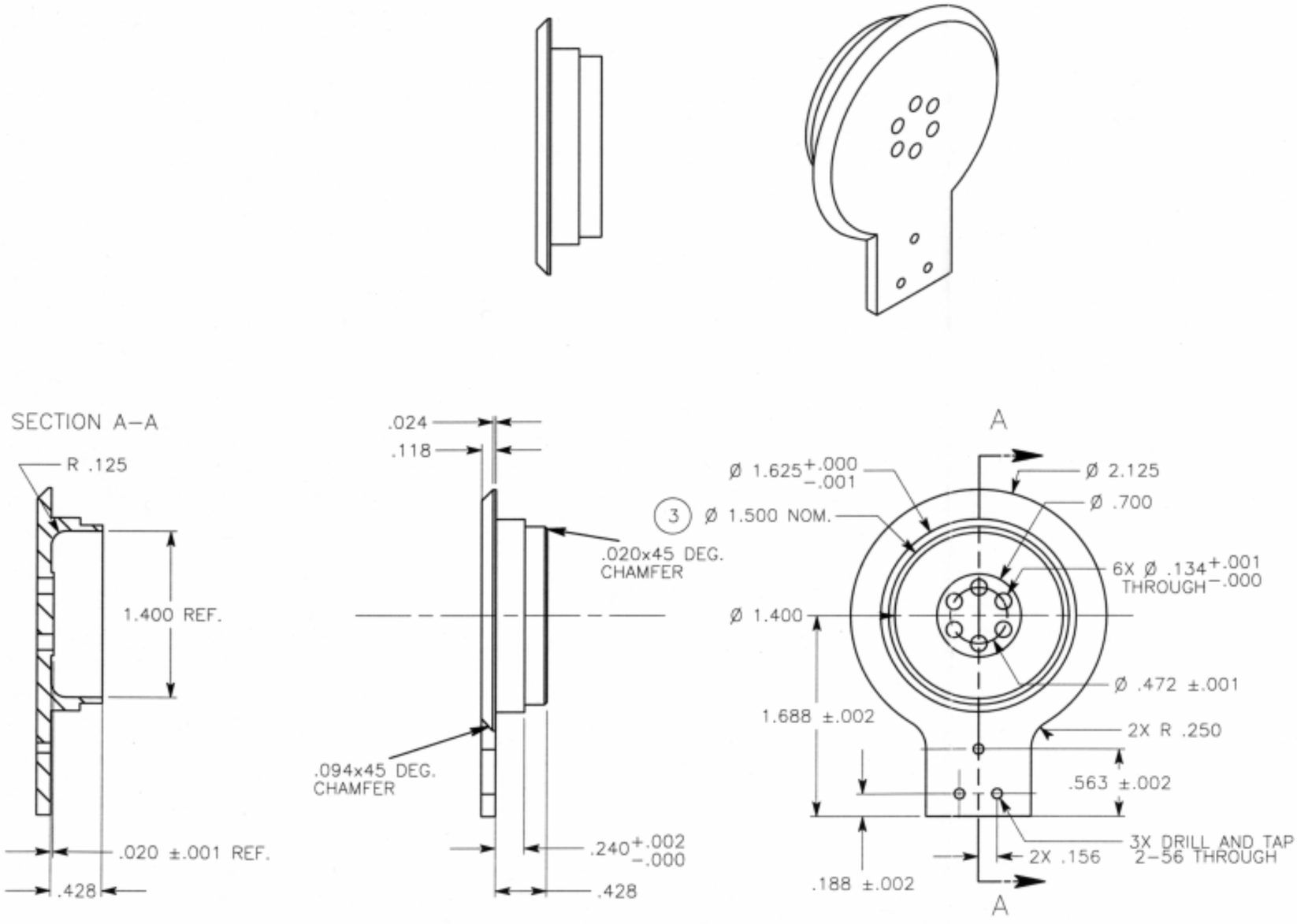


NOTES:

| | |
|---|---|
| 5 | |
| 4 | |
| 3 | DIMENSION SHOWN AS NOMINAL. MACHINE FOR SLIP FIT OF BEARING PROVIDED, KAYDON # KAA15AG0 |
| 2 | BREAK ALL EDGES .005-.008 UNLESS OTHERWISE SPECIFIED |
| 1 | ALL DIMENSION TOLERANCES +/-.005 UNLESS OTHERWISE SPECIFIED |

| | | |
|---|---|---|
| MATERIAL: AL 7075-T6 | QUANTITY: 86 | UNITS: INCHES |
| DRAWN BY: CHRIS VOORHEES | CONTACT: (818) 354-7994 | |
| ASSEMBLY: WRIST ASSEMBLY | DWG. NAME: LEFT YOKE STRUT | |
| PROJECT: FIDO NAVIGATION MAST | DWG. NUMBER: 3503 | |