3507 – WRIST CLAMPING PLATE

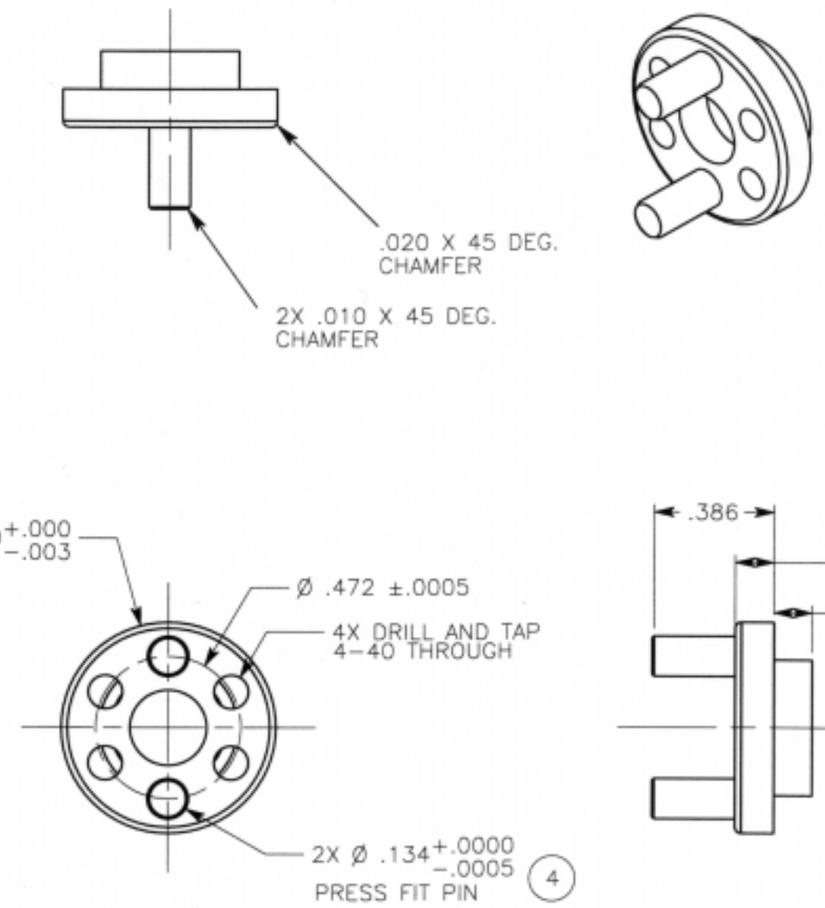

SCALE: 2:1

NOTES:

5	
4	PIN MATERIAL IS 416 S.S.
3	DIMENSION SHOWN AS NOMINAL. MACHINE FOR LIGHT PRESS FIT OF BEARING PROVIDED, STOCK DRIVE #S9912Y-G1837FS2
2	BREAK ALL EDGES .005–.008 UNLESS OTHERWISE SPECIFIED
1	ALL DIMENSION TOLERANCES +/−.003 UNLESS OTHERWISE SPECIFIED

MATERIAL: CRES 303 S.S.	QUANTITY: 8 6	UNITS: INCHES
DRAWN BY: CHRIS VOORHEES	CONTACT: (818) 354–7994	
ASSEMBLY: WRIST PITCH ASSY.	DWG. NAME: WRIST CLAMPING PLATE	
SYSTEM: FIDO NAVIGATION MAST	DWG. NUMBER: 3507	