REV. C 8/27/98
SHEET 1 OF 2 (S/N 001 ONLY)

3551–SHOULDER PITCH HOUSING

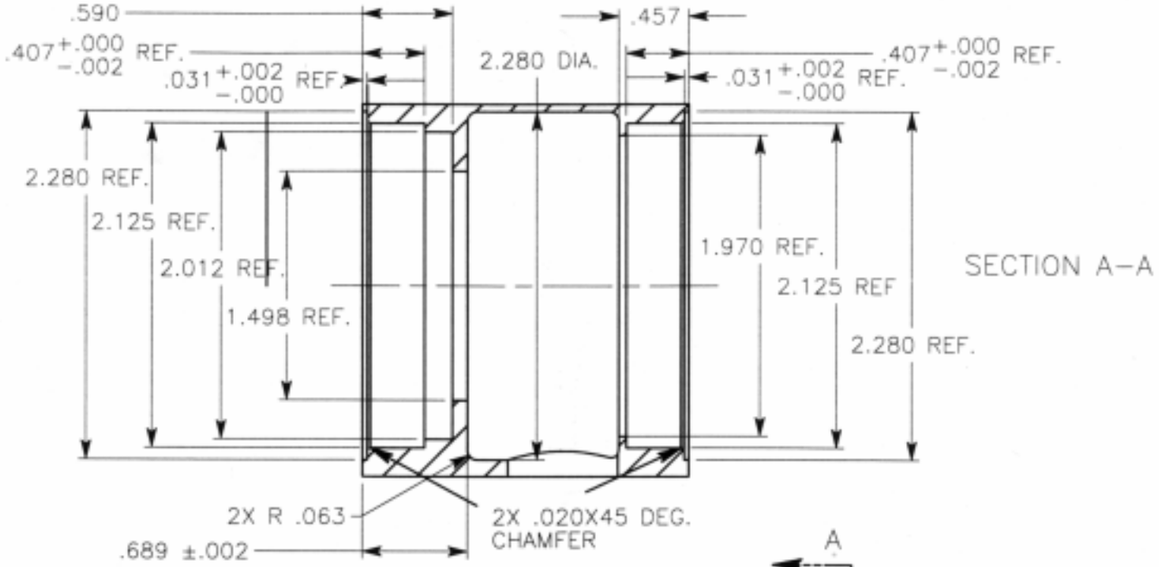

SECTION A–A

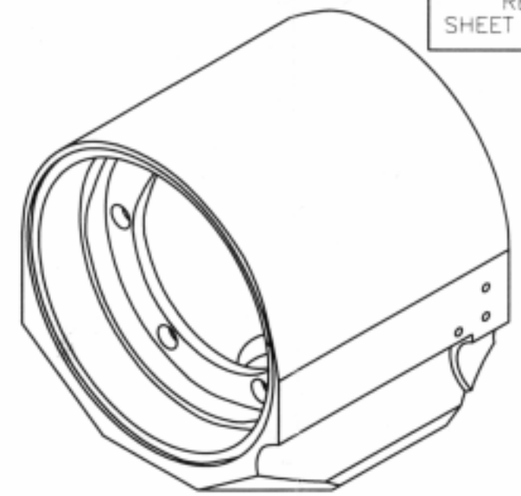

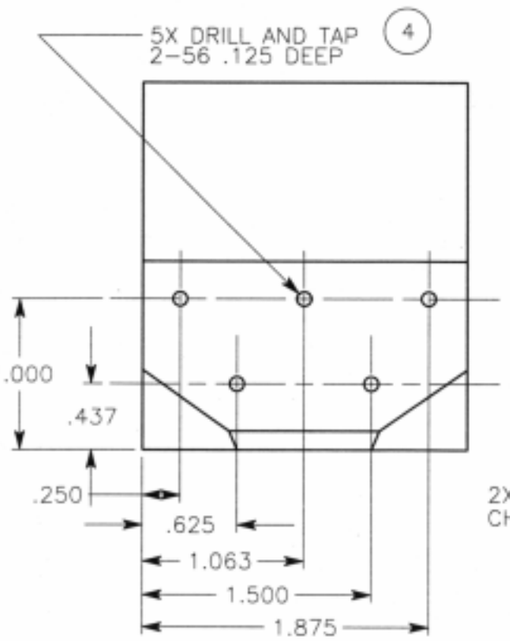

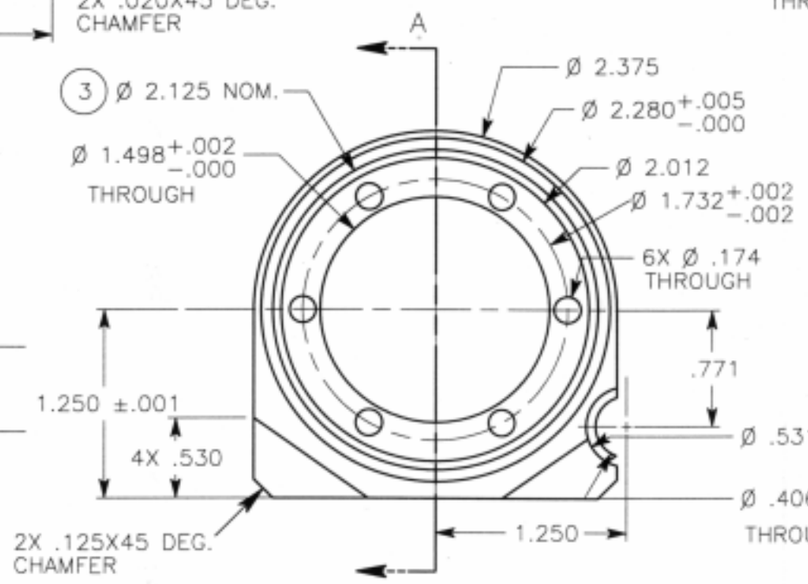

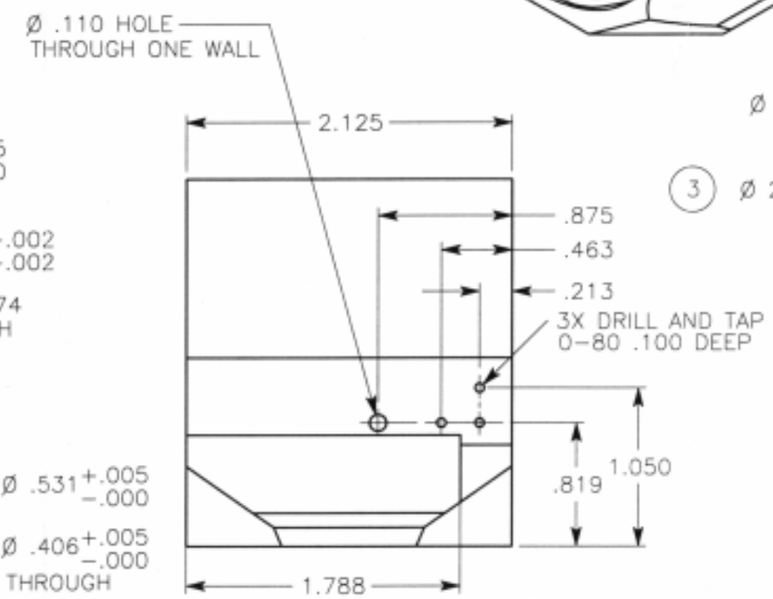

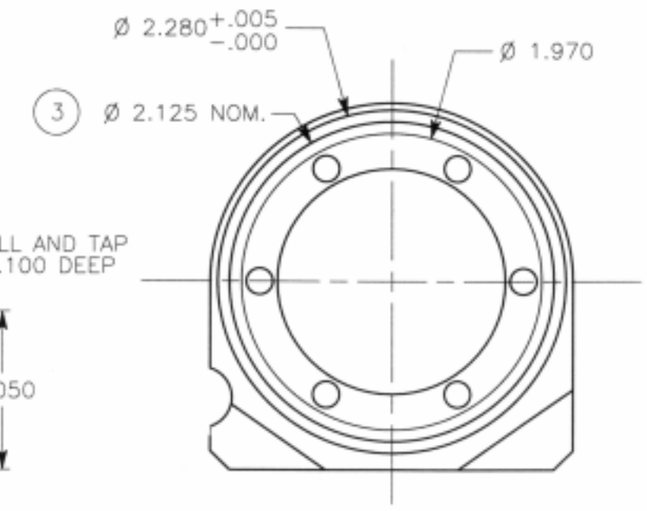

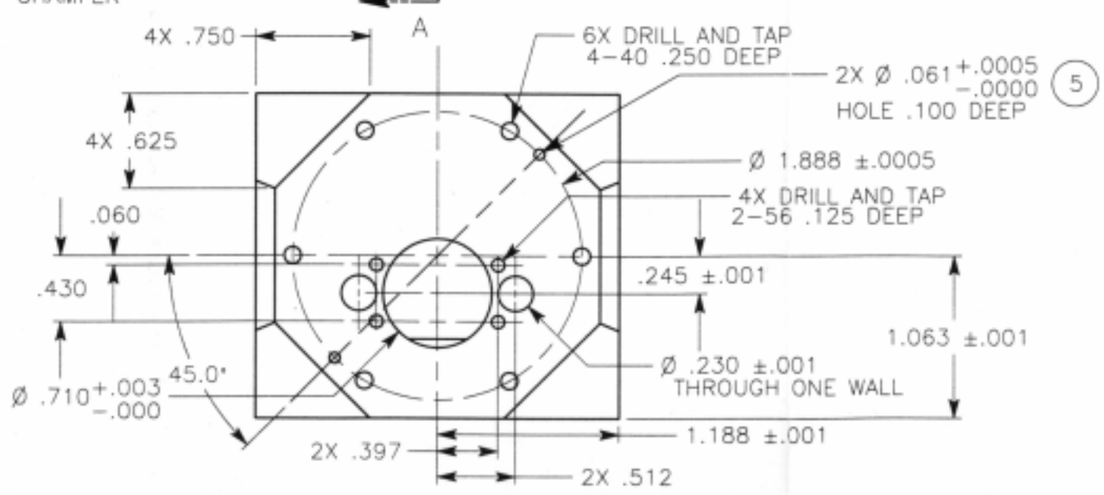

NOTES:

5	HOLE LOCATION DIMENSIONS SHOWN AS NOMINAL – TO BE SLIP FIT WITH LINK END CAP, P/N 3801, PROVIDED
4	5 HOLE PATTERN ON S/N 001 ONLY
3	DIMENSION SHOWN AS NOMINAL. MACHINE FOR SLIP FIT OF BEARING PROVIDED, KAYDON #KAA17AGO
2	BREAK ALL EDGES .005–.008 UNLESS OTHERWISE SPECIFIED
1	ALL DIMENSION TOLERANCES +/–.005 UNLESS OTHERWISE SPECIFIED

MATERIAL: PROVIDED	QUANTITY: x 3	UNITS: INCHES
DRAWN BY: CHRIS VOORHEES	CONTACT: (818) 354–7994	
ASSEMBLY: SHOULDER PITCH ASSY. ELBOW PITCH ASSY.	DWG. NAME: SHOULDER PITCH HOUSING	
SYSTEM: FIDO NAVIGATION MAST	DWG. NUMBER: 3551–001	