REV. B 8/27/98

3552– LEFT SHOULDER YOKE STRUT

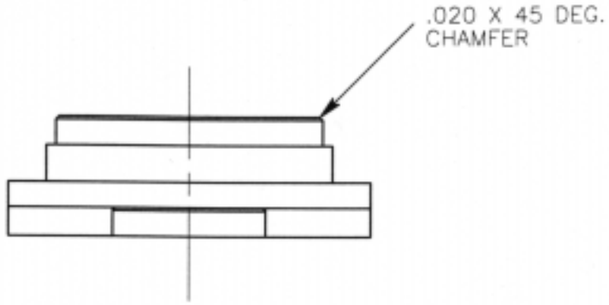

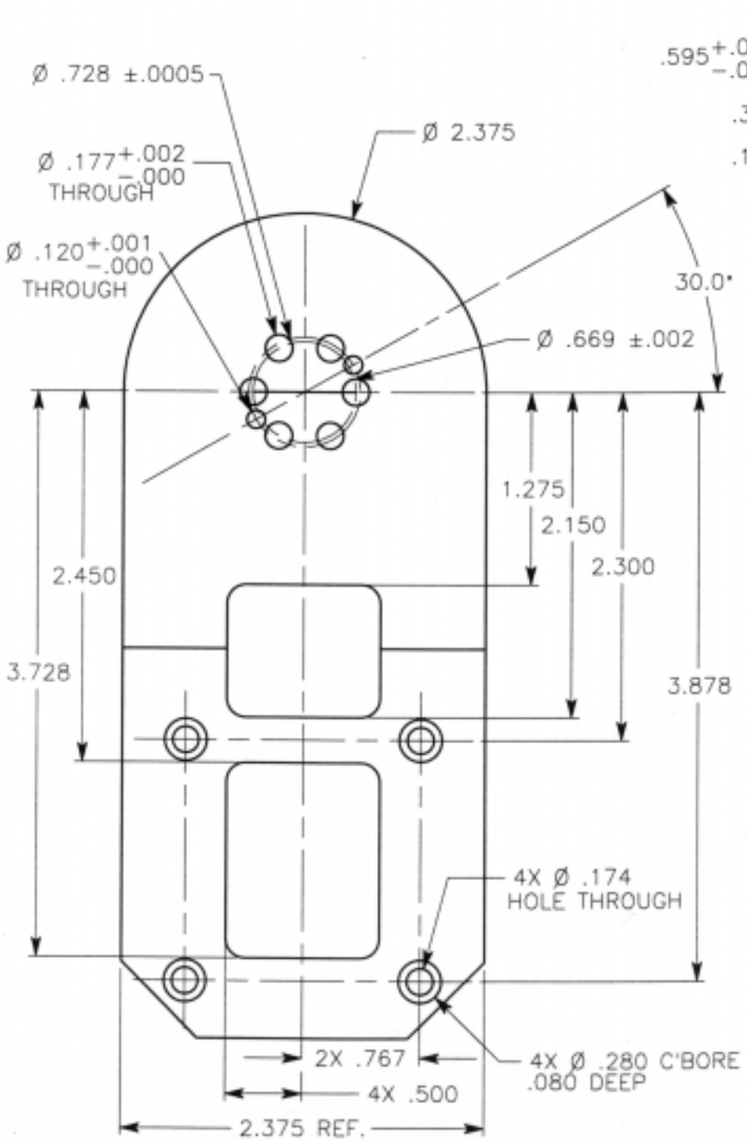

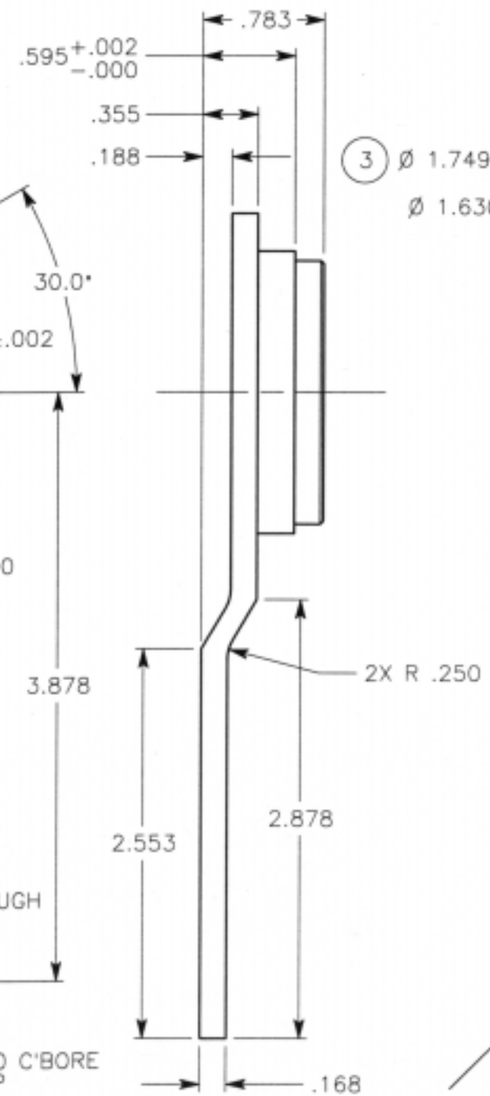

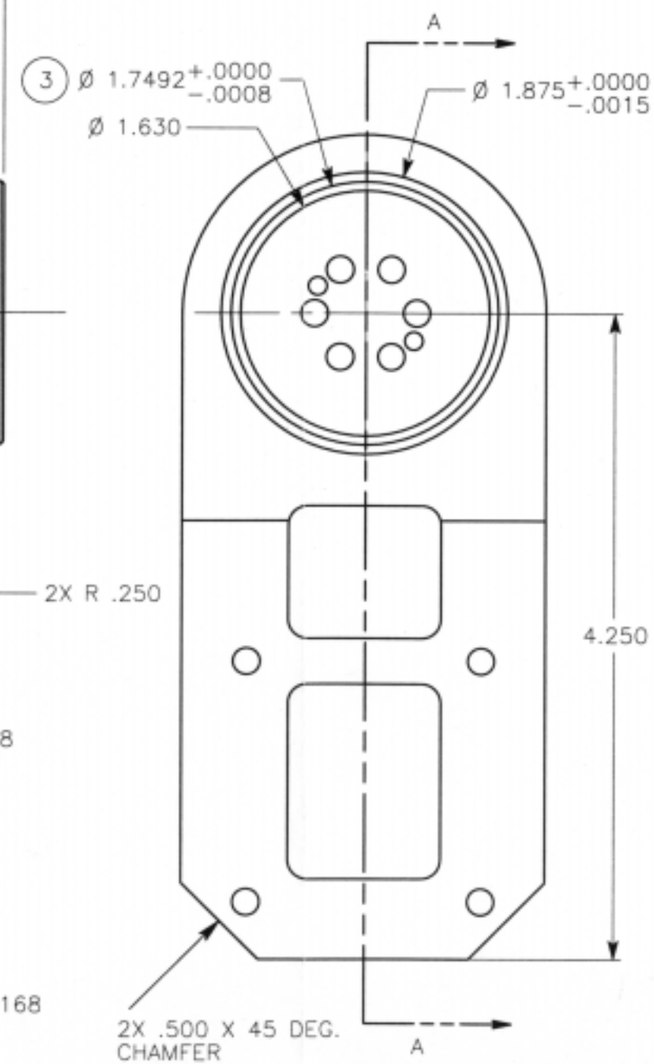

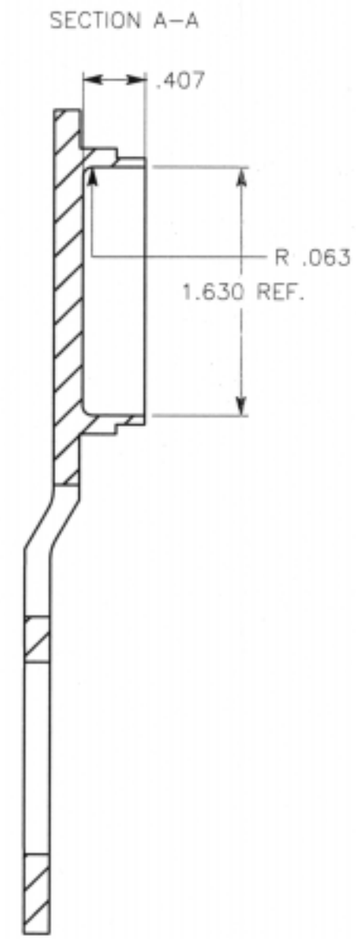

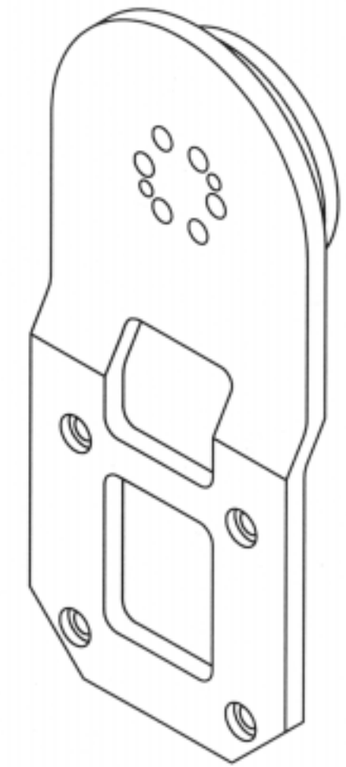

NOTES:

5	
4	
3	DIMENSION SHOWN AS NOMINAL RECOMMENDED CLEARANCE FOR BEARING, KAYDON #KAA17A00. MACHINE FOR SLIP FIT OF BEARING
2	BREAK ALL EDGES .005–.008 UNLESS OTHERWISE SPECIFIED
1	ALL DIMENSION TOLERANCES +/–.005 UNLESS OTHERWISE SPECIFIED

MATERIAL: AL 7075–T7	QUANTITY: ~~3~~ 5	UNITS: INCHES
DRAWN BY: CHRIS VOORHEES	CONTACT: (818) 354–7994	
ASSEMBLY: SHOULDER PITCH ASSY.	DWG. NAME: LEFT SHOULDER YOKE STRUT	
SYSTEM: FIDO NAVIGATION MAST	DWG. NUMBER: 3552	