3555 – SHOULDER/
ELBOW SHAFT

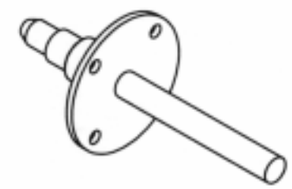

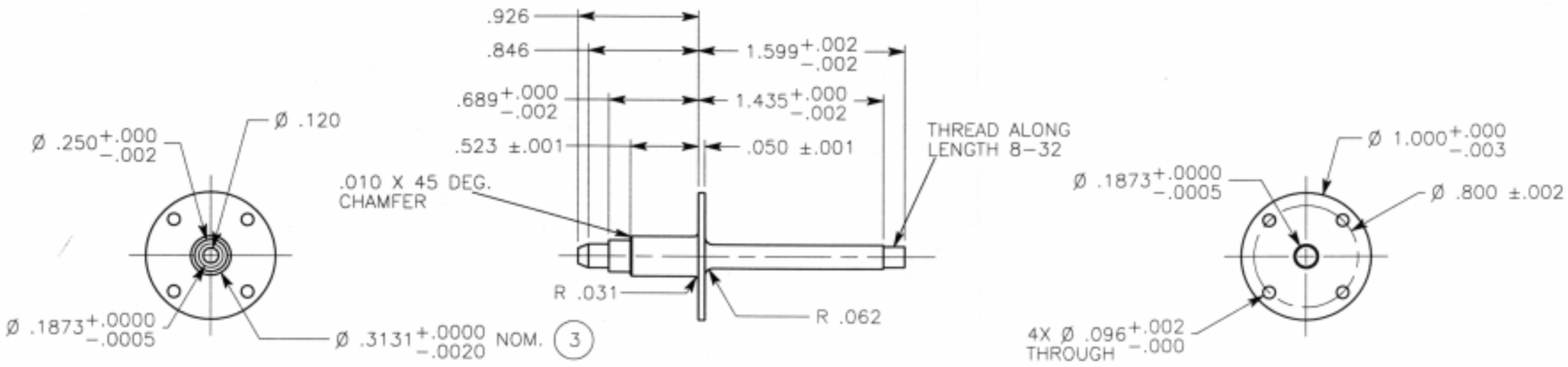

NOTES:

5	
4	
3	LOCATION USED FOR SHRINK FIT WITH WRIST OLDHAM COUPLING, P/N 3554. MAKE DIMENSION .0006 LARGER THAN HOLE DIM. NOTED ON P/N 3554
2	BREAK ALL EDGES .005–.008 UNLESS OTHERWISE SPECIFIED
1	ALL DIMENSION TOLERANCES +/−.003 UNLESS OTHERWISE SPECIFIED

MATERIAL: AL 7075–T7	QUANTITY: ~~8~~ 10	UNITS: INCHES
DRAWN BY: CHRIS VOORHEES	CONTACT: (818) 354–7994	
ASSEMBLY: SHOULDER PITCH ASSY. ELBOW PITCH ASSY.	DWG. NAME: SHOULDER/ELBOW SHAFT	
SYSTEM: FIDO NAVIGATION MAST	DWG. NUMBER: 3555	