3557 – SH/ELBOW MOTOR BRACKET

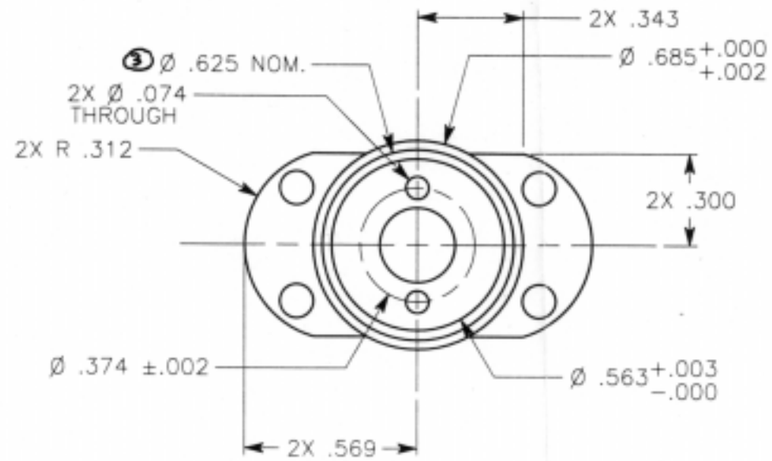

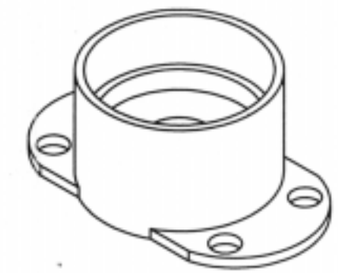

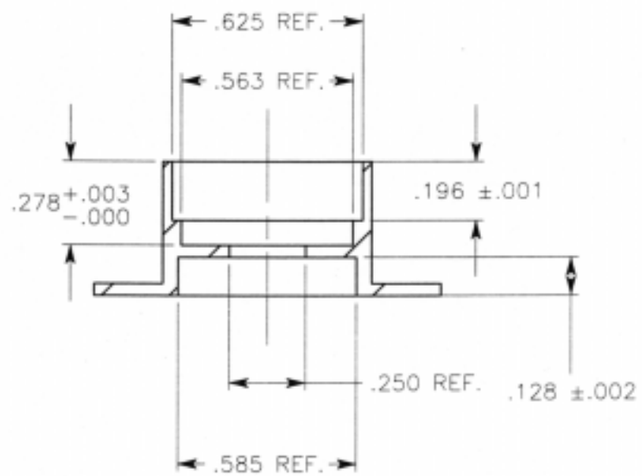

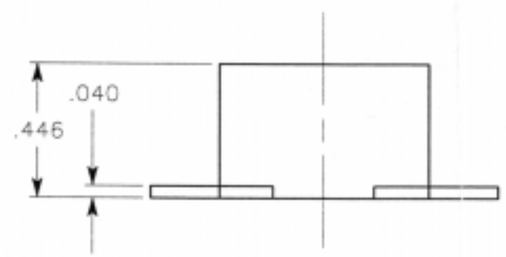

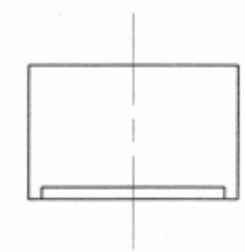

SCALE: 2:1

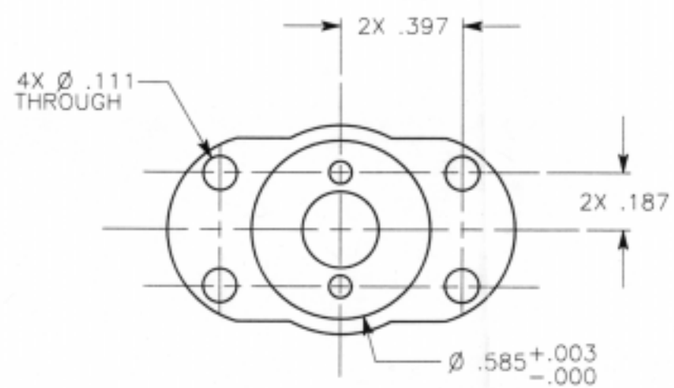

NOTES:

5	
4	
3	MAKE FOR TIGHT SLIP FIT OF BEARING, P/N 39912Y-G2562PS2
2	BREAK ALL EDGES .005–.008 UNLESS OTHERWISE SPECIFIED
1	ALL DIMENSION TOLERANCES +/−.003 UNLESS OTHERWISE SPECIFIED

MATERIAL: AL 7075–T7	QUANTITY: ~~8~~ 9	UNITS: INCHES
DRAWN BY: CHRIS VOORHEES	CONTACT: (818) 354–7994	
ASSEMBLY: SHOULDER PITCH ASSY. ELBOW PITCH ASSY	DWG. NAME: SH/ELBOW MOTOR BRACKET	
SYSTEM: FIDO NAVIGATION MAST	DWG. NUMBER: 3557	