3558 – SH/ELBOW CLAMPING PLATE

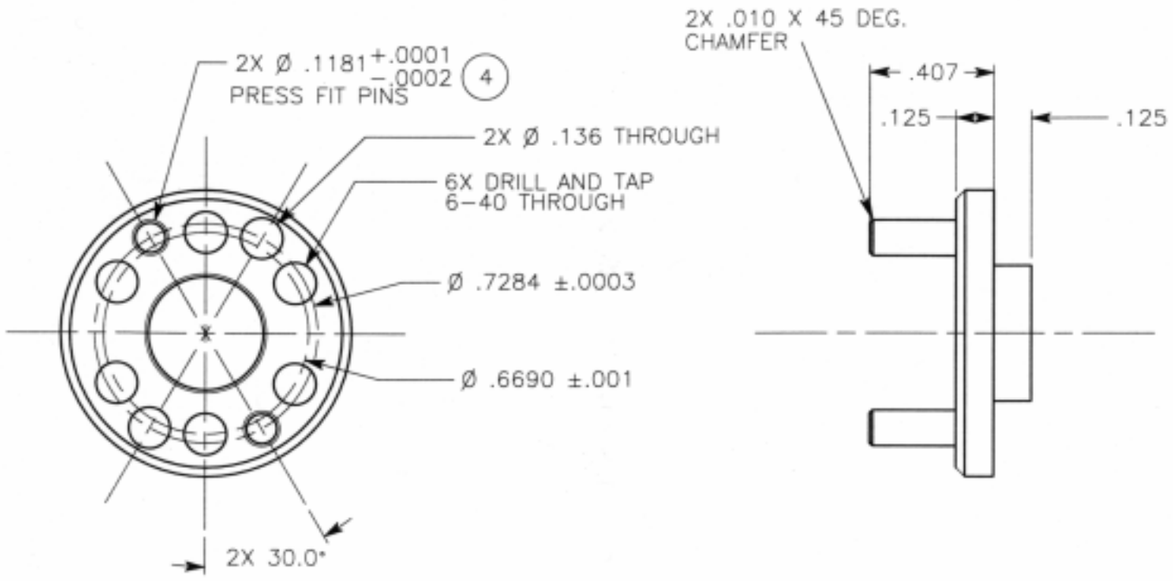

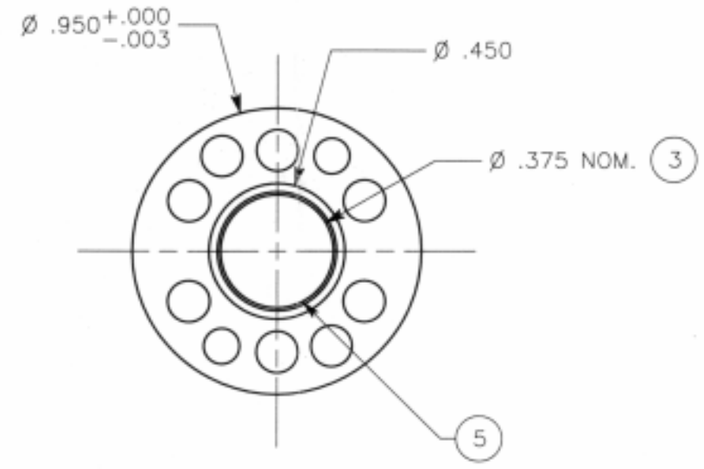

SCALE: 2:1

NOTES:

(5)	.015 X 45 DEG CHAMFER ON EACH SIDE OF HOLE
(4)	PIN MATERIAL IS 416 S.S.
(3)	DIMENSION SHOWN AS NOMINAL. MACHINE FOR LIGHT PRESS FIT OF BEARING PROVIDED, STOCK DRIVE #S9912Y–G1837FS2
2	BREAK ALL EDGES .005–.008 UNLESS OTHERWISE SPECIFIED
1	ALL DIMENSION TOLERANCES +/–.003 UNLESS OTHERWISE SPECIFIED

MATERIAL: CRES 303 S.S.	QUANTITY: 79	UNITS: INCHES
DRAWN BY: CHRIS VOORHEES	CONTACT: (818) 354–7994	
ASSEMBLY: SHOULDER PITCH ASSY. ELBOW PITCH ASSY	DWG. NAME: SH/ELBOW CLAMPING PLATE	
SYSTEM: FIDO NAVIGATION MAST	DWG. NUMBER: 3558	