3560 – SHOULDER/
ELBOW BEVEL GEAR

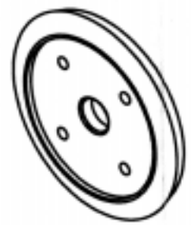

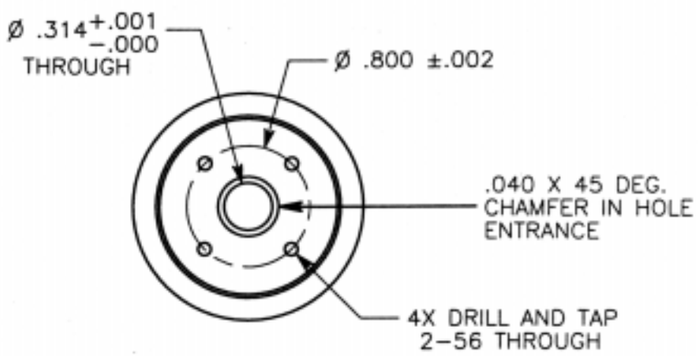

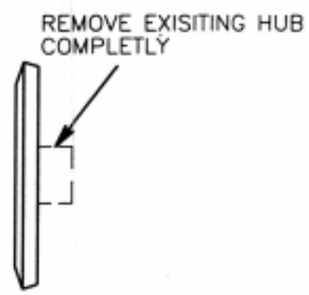

NOTES:

5	
4	
3	
2	BREAK ALL EDGES .005–.008 UNLESS OTHERWISE SPECIFIED
1	ALL DIMENSION TOLERANCES +/–.003 UNLESS OTHERWISE SPECIFIED

MATERIAL: AL–2024 GEAR PROVIDED	QUANTITY: 8	UNITS: INCHES
DRAWN BY: CHRIS VOORHEES	CONTACT: (818) 354–7994	
ASSEMBLY: SHOULDER PITCH ASSY. ELBOW PITCH ASSY.	DWG. NAME: SHOULDER/ELBOW BEVEL GEAR	
SYSTEM: FIDO NAVIGATION MAST	DWG. NUMBER: 3560	