3561 – CIRCULAR SPLINE MODIFICATIONS

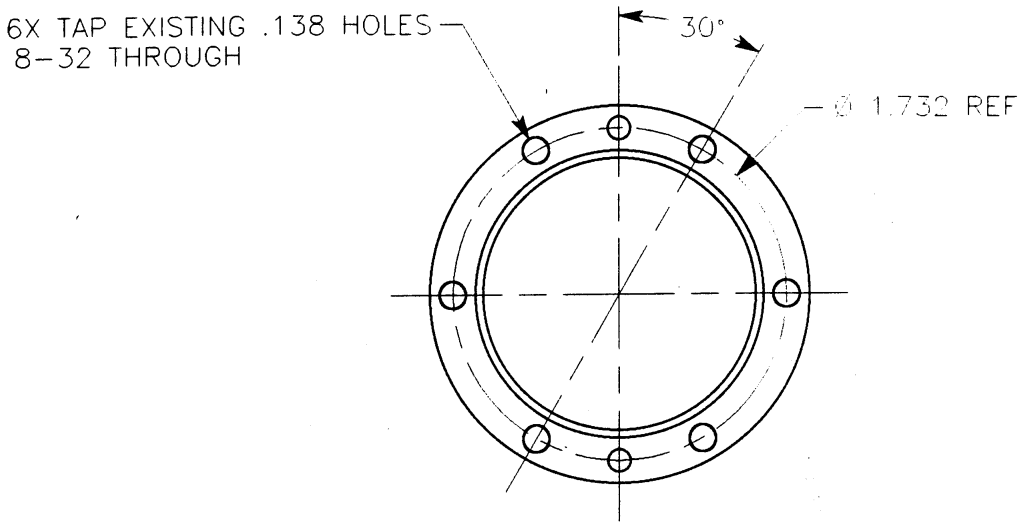

QUANTITY: 2

3561–1

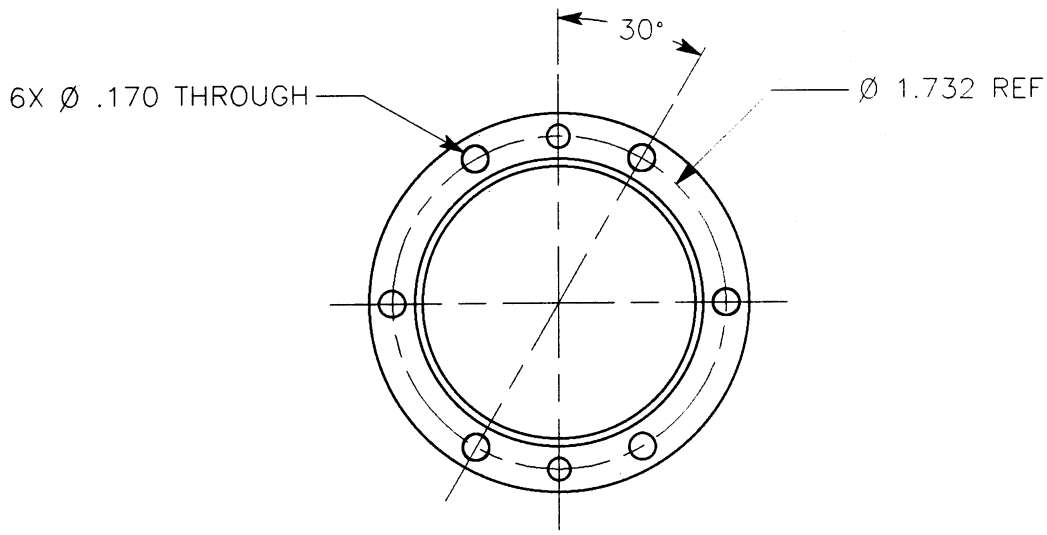

QUANTITY: 1

3561–2

NOTES:

2	
1	ALL DIMENSION TOLERANCES +/– 003 UNLESS OTHERWISE SPECIFIED

MATERIAL: AL 7075–T7	QUANTITY: 2:–1, 1:–2	UNITS: INCHES
DRAWN BY: CHRIS VOORHEES	CONTACT: (818) 354–7994	
ASSEMBLY: SHOULDER ASSY.	DWG. NAME: CIRCULAR SPLINE MODIFICATIONS	
SYSTEM: FIDO NAVIGATION MAST	DWG. NUMBER: 3561	