REV. B 8/27/98

3602– LEFT ELBOW YOKE STRUT

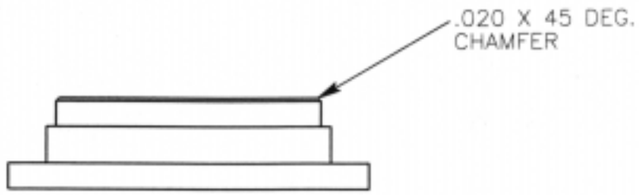

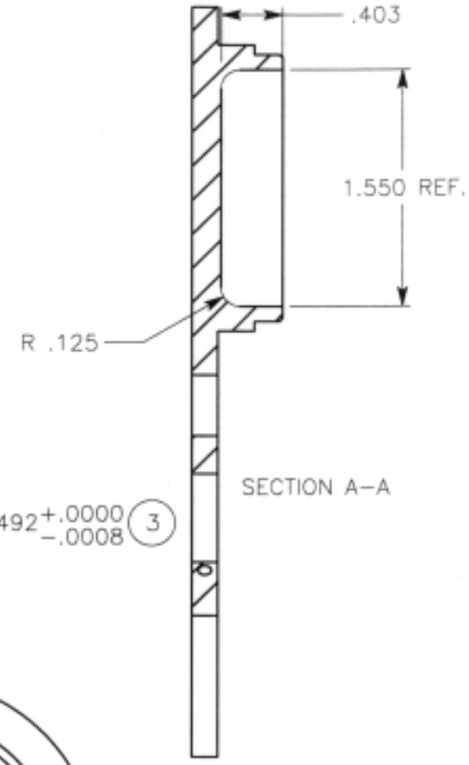

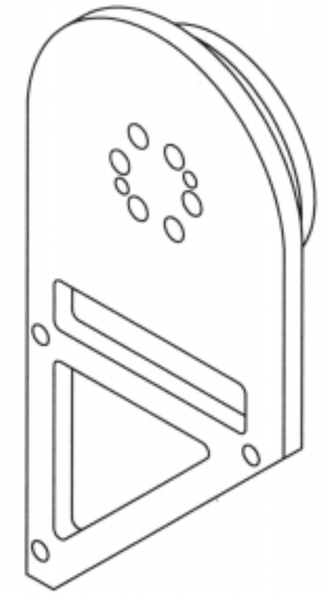

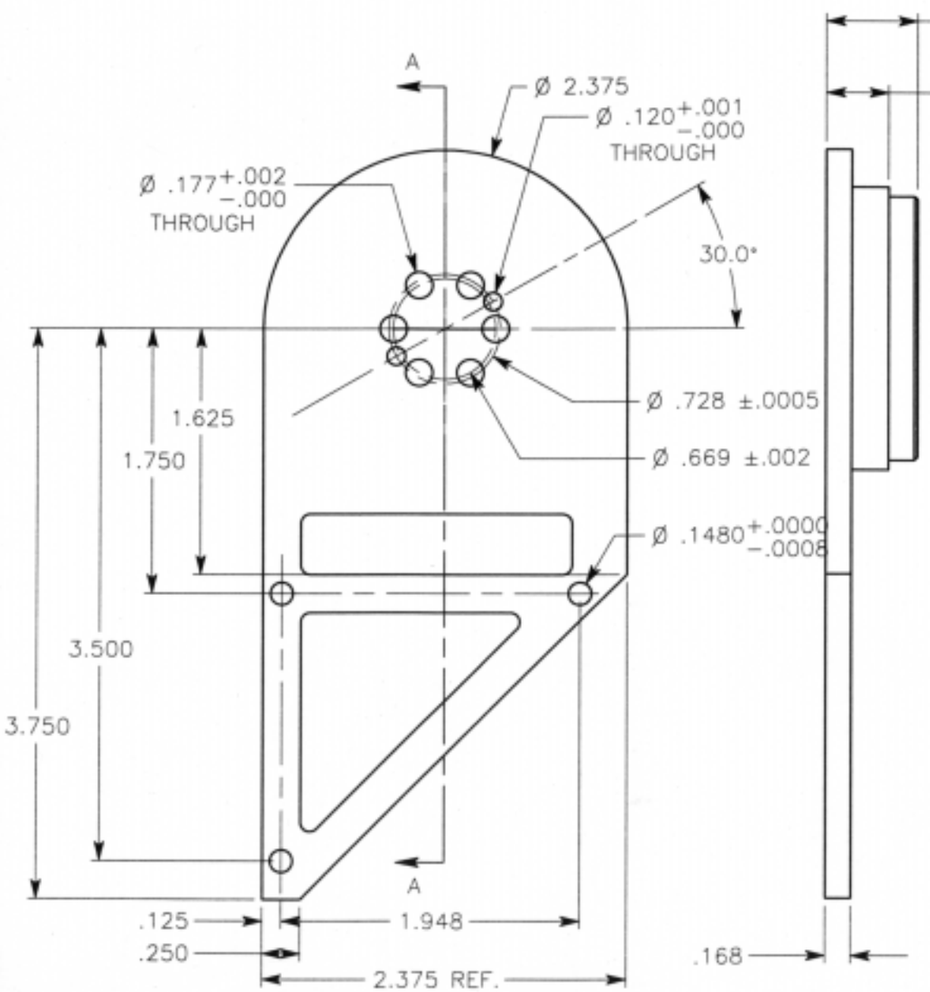

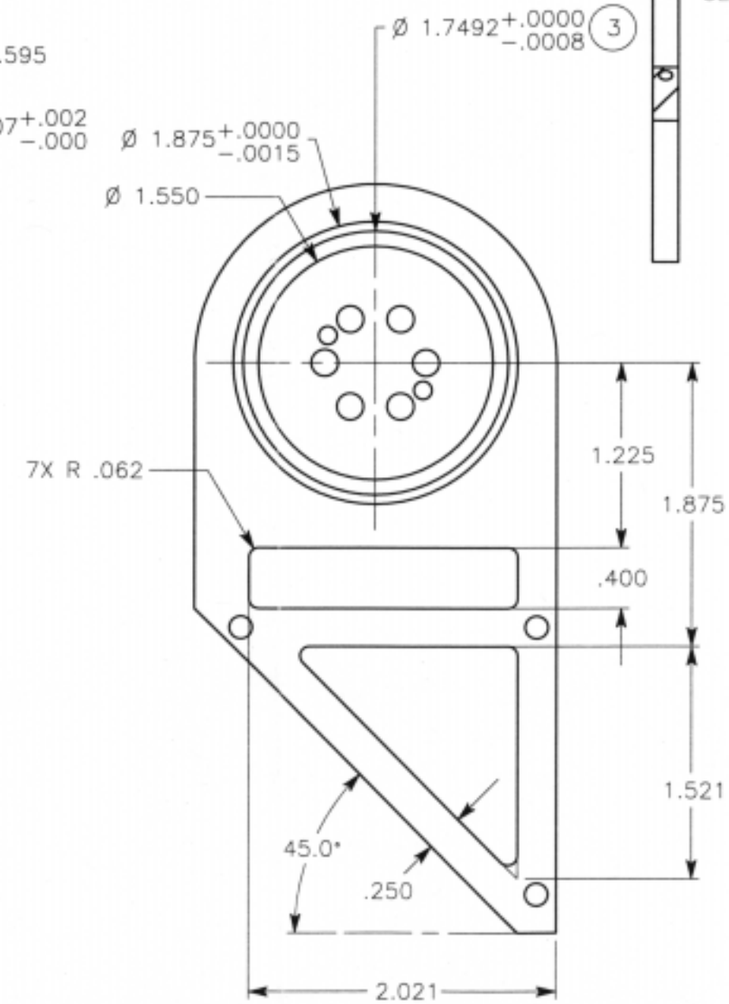

NOTES:

5	
4	
(3)	DIMENSION SHOWN AS NOMINAL RECOMMENDED CLEARANCE FOR BEARING, KAYDON # KAA17A60. MACHINE FOR SLIP FIT OF BEARING
2	BREAK ALL EDGES .005–.008 UNLESS OTHERWISE SPECIFIED
1	ALL DIMENSION TOLERANCES +/–.005 UNLESS OTHERWISE SPECIFIED

MATERIAL: AL 7075–T7	QUANTITY: ~~3~~ 2	UNITS: INCHES
DRAWN BY: CHRIS VOORHEES	CONTACT: (818) 354–7994	
ASSEMBLY: ELBOW PITCH ASSY.	DWG. NAME: LEFT ELBOW YOKE STRUT	
SYSTEM: FIDO NAVIGATION MAST	DWG. NUMBER: 3602	