REV. B 8/12/98

3603– YOKE STRUT CONNECTOR

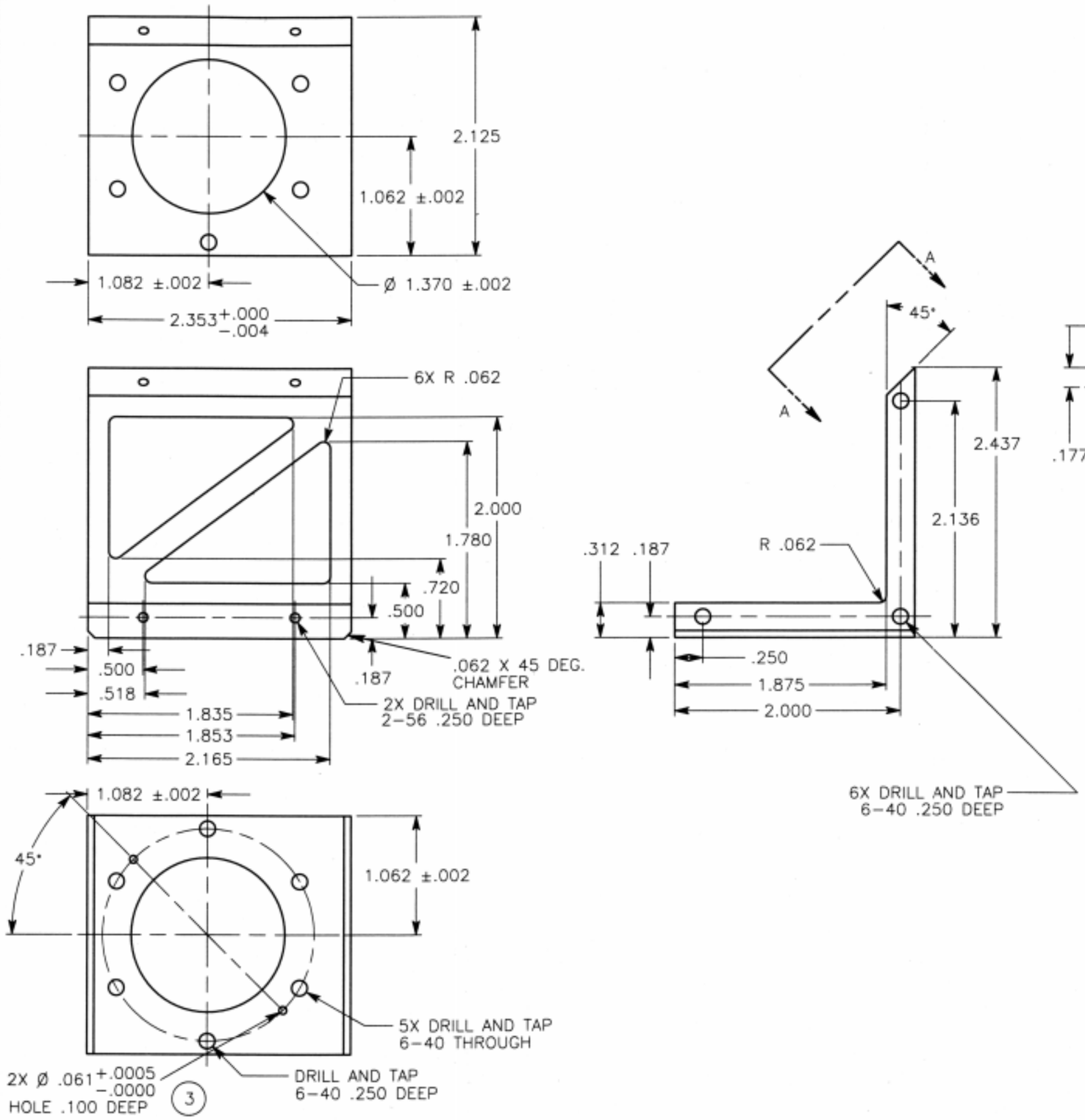

NOTES:

5	
4	
3	HOLE LOCATION DIMENSIONS SHOWN AS NOMINAL – TO BE SLIP FIT WITH LINK END CAP, P/N 3801, PROVIDED
2	BREAK ALL EDGES .005–.008 UNLESS OTHERWISE SPECIFIED
1	ALL DIMENSION TOLERANCES +/–.005 UNLESS OTHERWISE SPECIFIED

MATERIAL: PROVIDED	QUANTITY: x 2	UNITS: INCHES
DRAWN BY: CHRIS VOORHEES	CONTACT: (818) 354–7994	
ASSEMBLY: ELBOW PITCH ASSY.	DWG. NAME: YOKE STRUT CONNECTOR	
SYSTEM: FIDO NAVIGATION MAST	DWG. NUMBER: 3603	