REV. C 8/18/98

3701 – SHOULDER YAW HOUSING

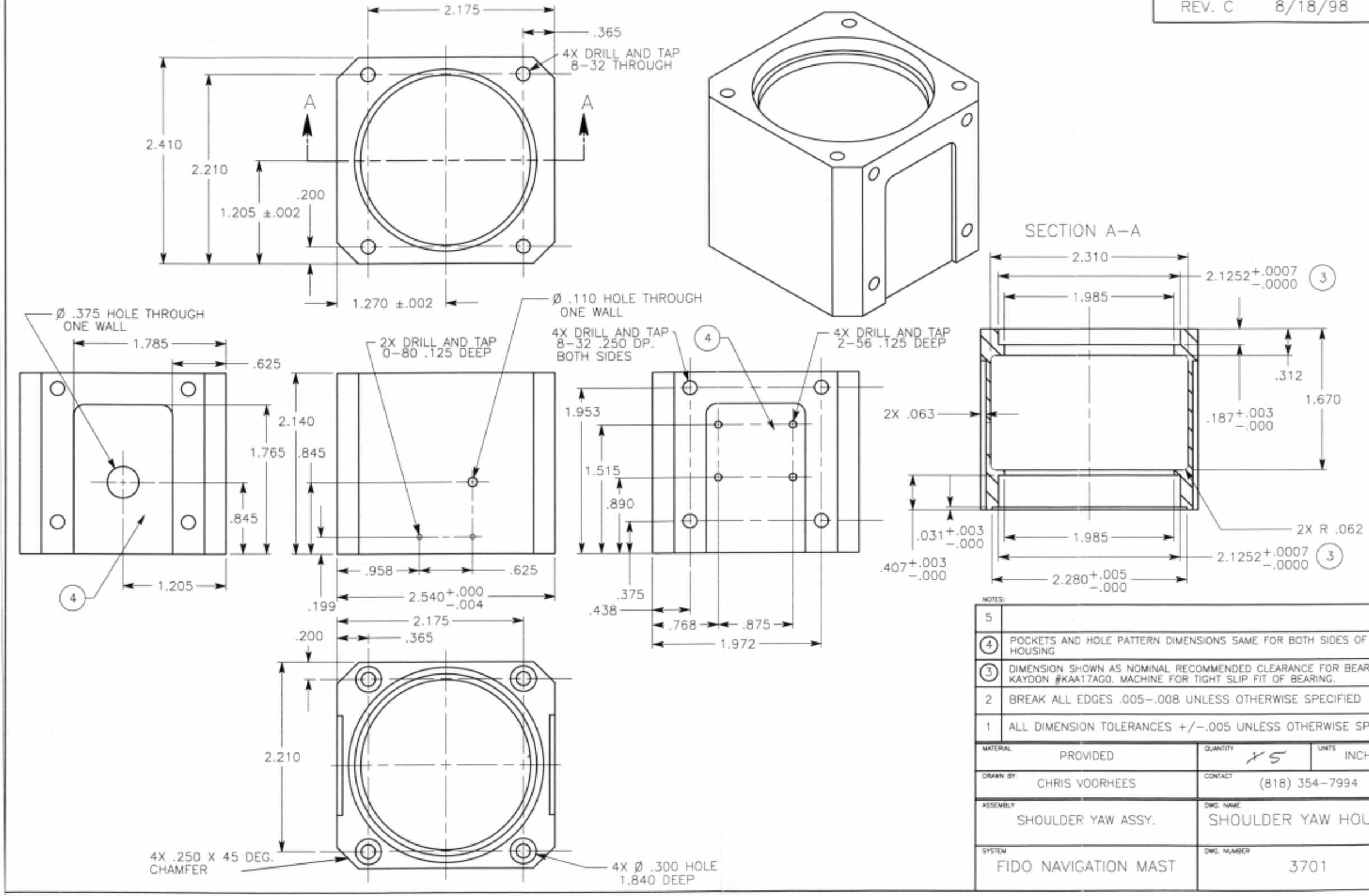

NOTES:

5	
4	POCKETS AND HOLE PATTERN DIMENSIONS SAME FOR BOTH SIDES OF HOUSING
3	DIMENSION SHOWN AS NOMINAL RECOMMENDED CLEARANCE FOR BEARING, KAYDON #KAA17A0. MACHINE FOR TIGHT SLIP FIT OF BEARING.
2	BREAK ALL EDGES .005–.008 UNLESS OTHERWISE SPECIFIED
1	ALL DIMENSION TOLERANCES +/–.005 UNLESS OTHERWISE SPECIFIED

MATERIAL: PROVIDED	QUANTITY: X 5	UNITS: INCHES
DRAWN BY: CHRIS VOORHEES	CONTACT: (818) 354-7994	
ASSEMBLY: SHOULDER YAW ASSY.	DWG. NAME: SHOULDER YAW HOUSING	
SYSTEM: FIDO NAVIGATION MAST	DWG. NUMBER: 3701	