REV. B 8/27/98

3704 – STATOR END CAP

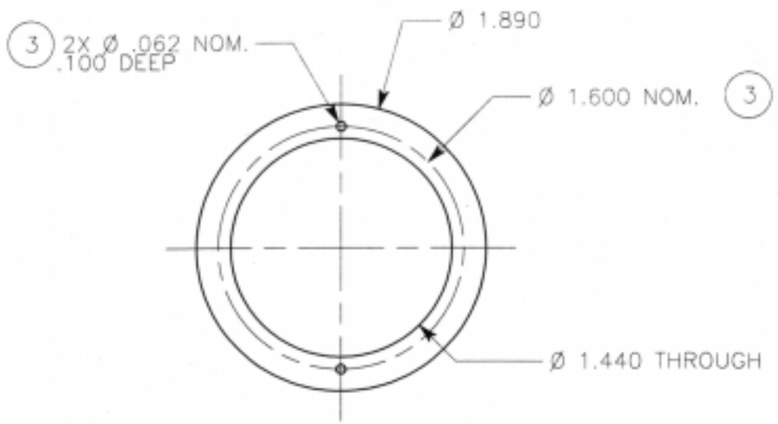

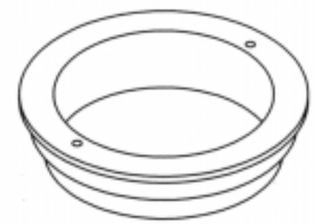

VIEW A – SPANNER WRENCH FOR PART INSTALLATION

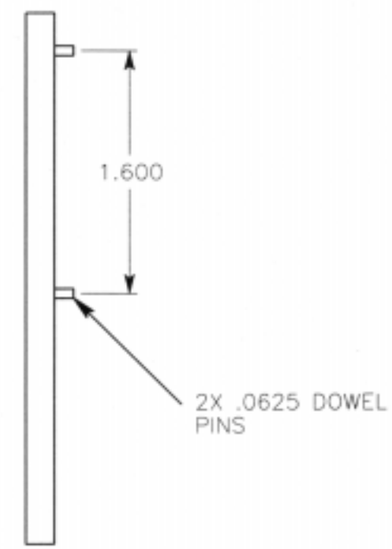

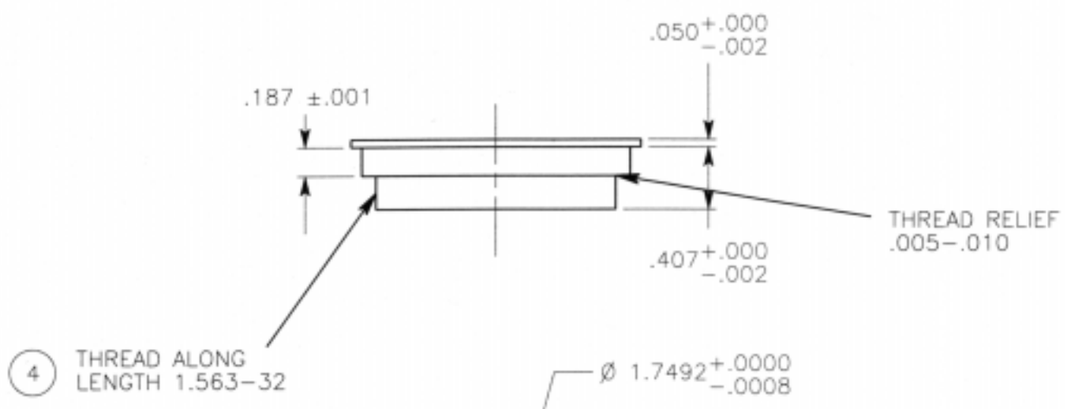

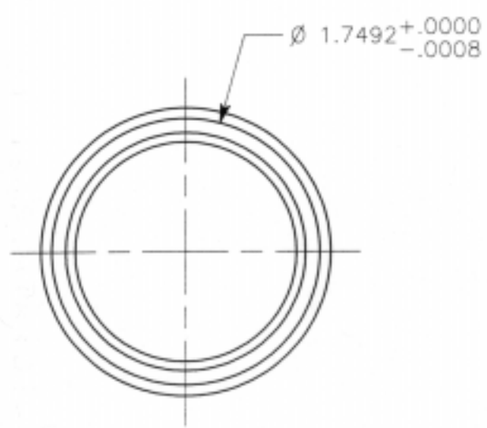

NOTES:

5	
4	THREAD TO MATCH MATING PIECE, P/N 3703 STATOR END INTERFACE
3	HOLES TO INTERFACE TO INSTALLATION WRENCH SHOWN IN VIEW A
2	BREAK ALL EDGES .005–.008 UNLESS OTHERWISE SPECIFIED
1	ALL DIMENSION TOLERANCES +/–.003 UNLESS OTHERWISE SPECIFIED

MATERIAL: AL 7075–T7	QUANTITY:	UNITS: INCHES
DRAWN BY: CHRIS VOORHEES	CONTACT: (818) 354–7994	
ASSEMBLY: SHOULDER YAW ASSY.	DWG. NAME: STATOR END CAP	
SYSTEM: FIDO NAVIGATION MAST	DWG. NUMBER: 3704	