3706 – MID-STATOR

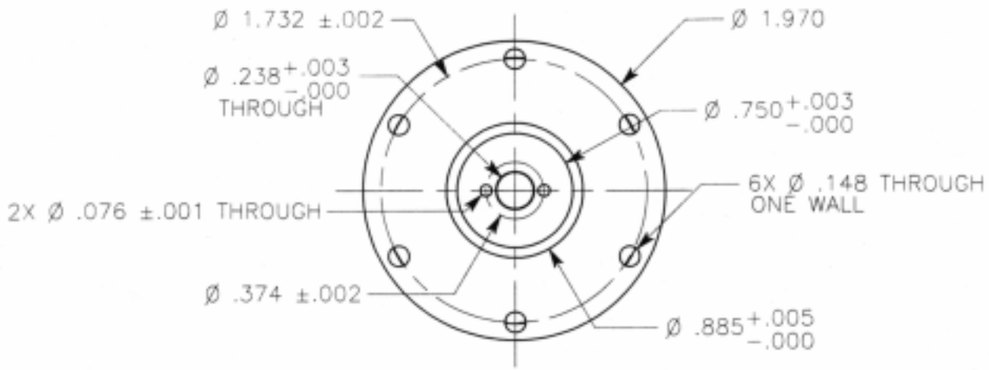

SECTION A–A

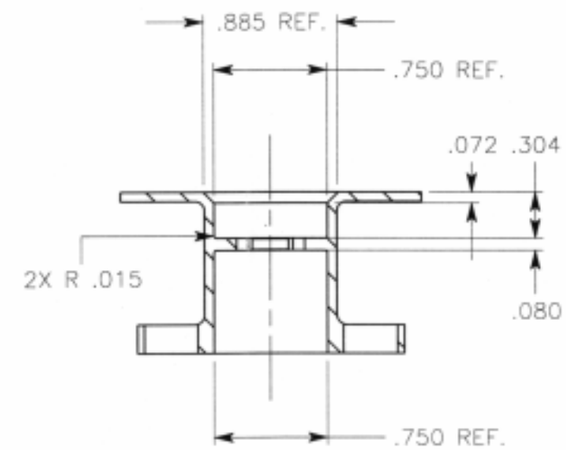

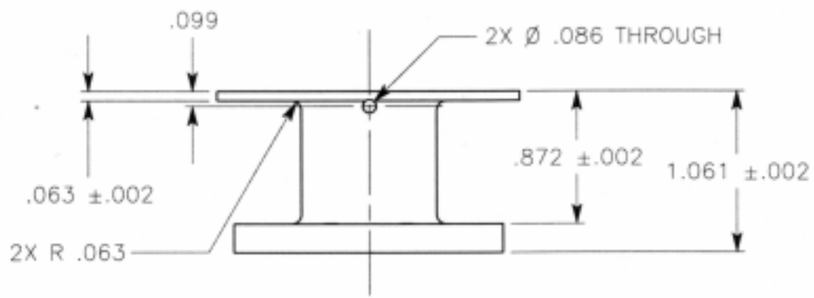

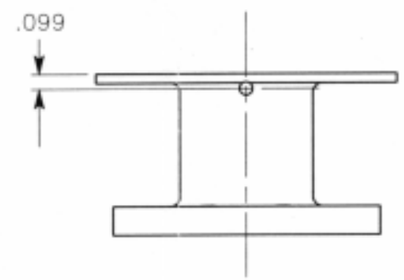

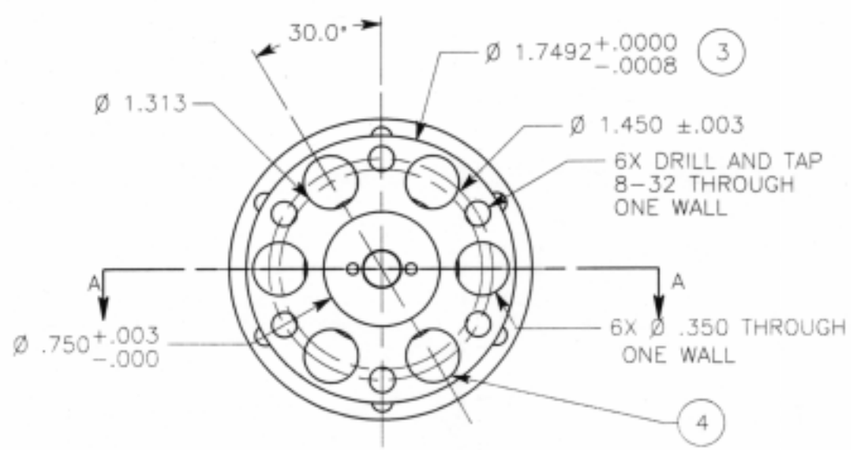

NOTES:

5	
4	BREAK EDGES OF ALL 6 HOLES .010–.012
3	DIMENSION SHOWN AS NOMINAL RECOMMENDED CLEARANCE FOR BEARING, KAYDON #KAA17A00. MACHINE FOR TIGHT SLIP FIT OF BEARING.
2	BREAK ALL EDGES .005–.008 UNLESS OTHERWISE SPECIFIED
1	ALL DIMENSION TOLERANCES +/–.003 UNLESS OTHERWISE SPECIFIED

MATERIAL: AL 7075–T7	QUANTITY: 1	UNITS: INCHES
DRAWN BY: CHRIS VOORHEES	CONTACT: (818) 354–7994	
ASSEMBLY: SHOULDER YAW ASSY.	DWG. NAME: MID–STATOR	
SYSTEM: FIDO NAVIGATION MAST	DWG. NUMBER: 3706	