3707 – STATOR BASE PLATE

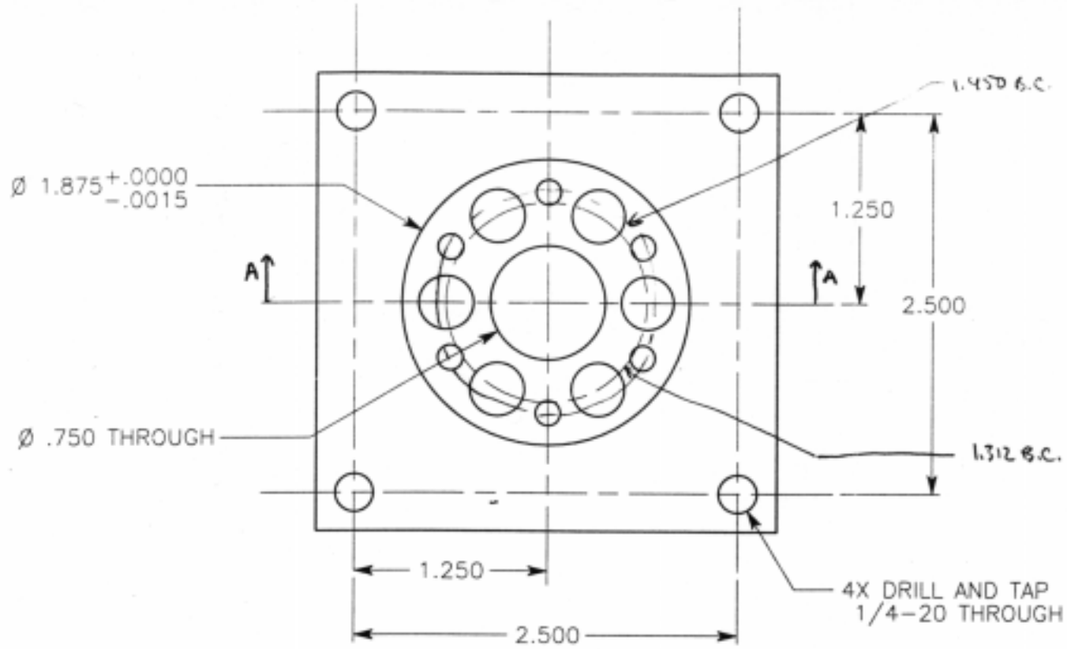

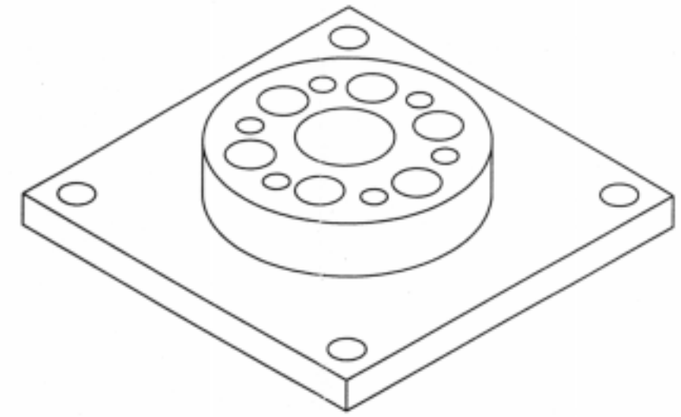

SECTION A-A

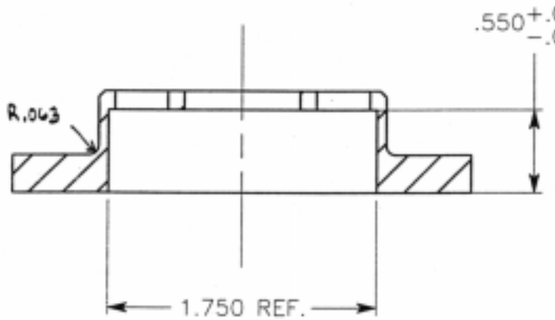

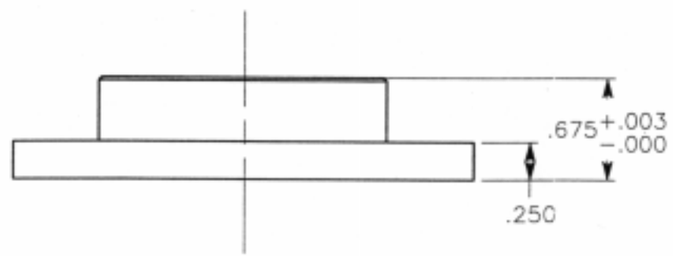

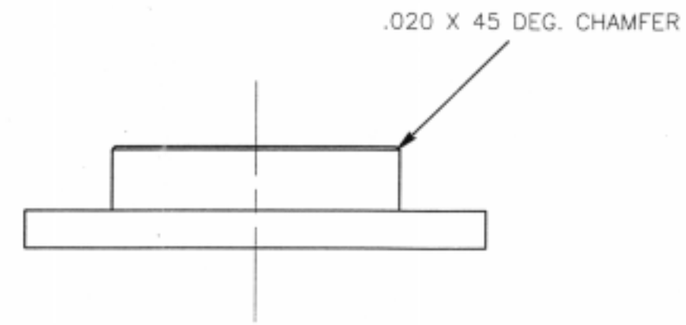

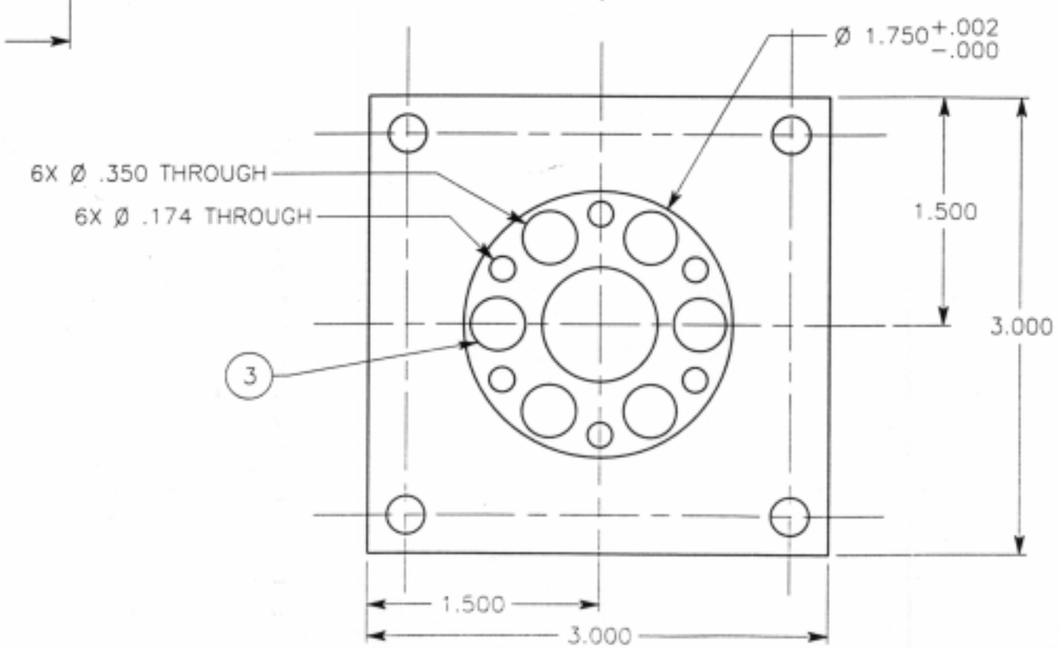

NOTES:

5	
4	
3	CHAMFER EDGES OF ALL 6 HOLES .010
2	BREAK ALL EDGES .005–.008 UNLESS OTHERWISE SPECIFIED
1	ALL DIMENSION TOLERANCES +/–.005 UNLESS OTHERWISE SPECIFIED

MATERIAL: AL 7075–T7	QUANTITY: ~~8~~ 1	UNITS: INCHES
DRAWN BY: CHRIS VOORHEES	CONTACT: (818) 354–7994	
ASSEMBLY: SHOULDER YAW ASSY.	DWG. NAME: STATOR BASE PLATE	
SYSTEM: FIDO NAVIGATION MAST	DWG. NUMBER: 3707	