8/20/98 REV. B

3802– ROVER / MAST INTERFACE

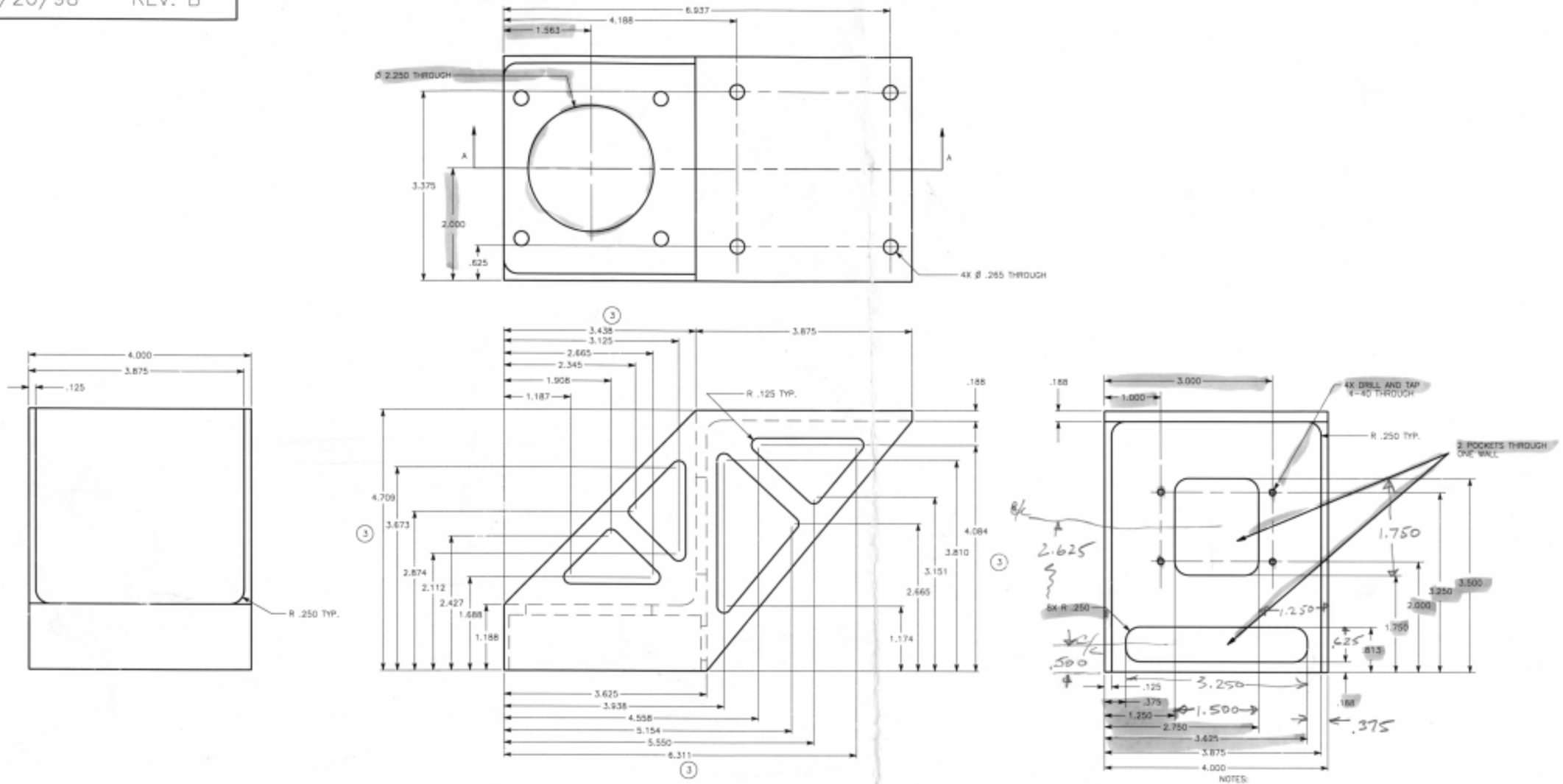

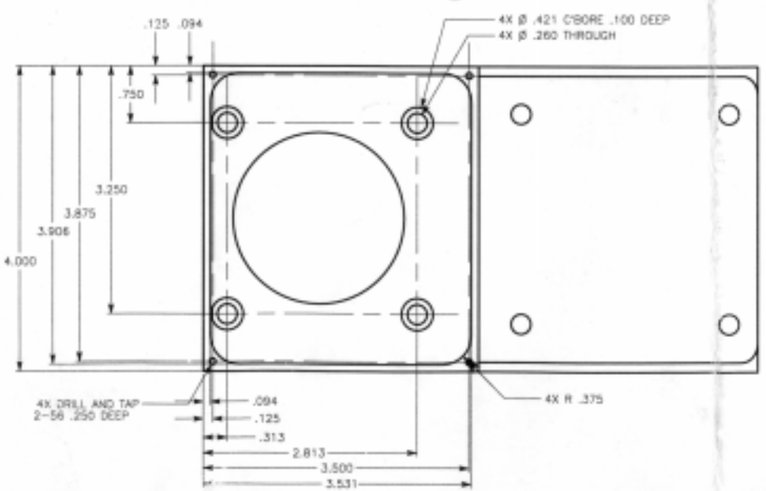

SHEET 1 OF 2
SCALE– HALF

NOTES:

5	
4	
3	DIMENSIONS SIMILAR FOR CUT-OUTS ON BOTH SIDES OF PART
2	BREAK ALL EDGES .005–.008 UNLESS OTHERWISE SPECIFIED
1	ALL DIMENSION TOLERANCES +/–.005 UNLESS OTHERWISE SPECIFIED

MATERIAL: AL 7075–T7	QUANTITY: 2	UNITS: INCHES
DRAWN BY: CHRIS VOORHEES	CONTACT: (818) 354–7994	
ASSEMBLY: TOP LEVEL ASSY.	DWG. NAME: ROVER / MAST INTERFACE	
SYSTEM: FIDO NAVIGATION MAST	DWG. NUMBER: 3802	

8/20/98 REV. B

3802 – ROVER / MAST INTERFACE

ISO-VIEW

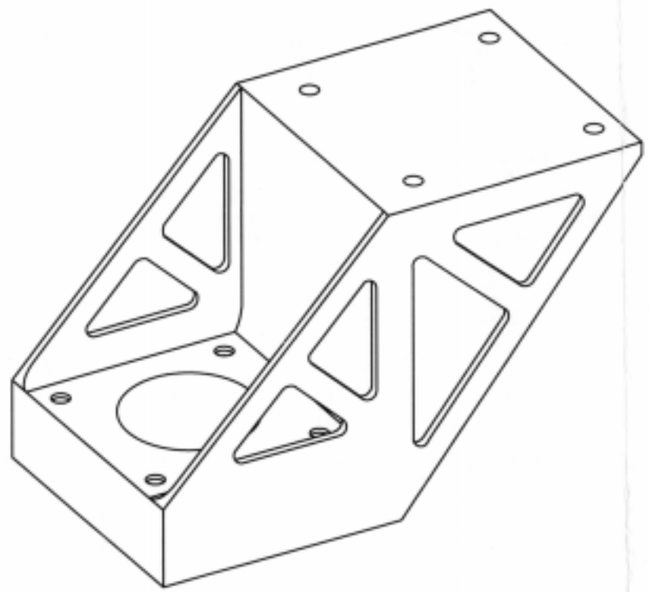

SECTION A–A

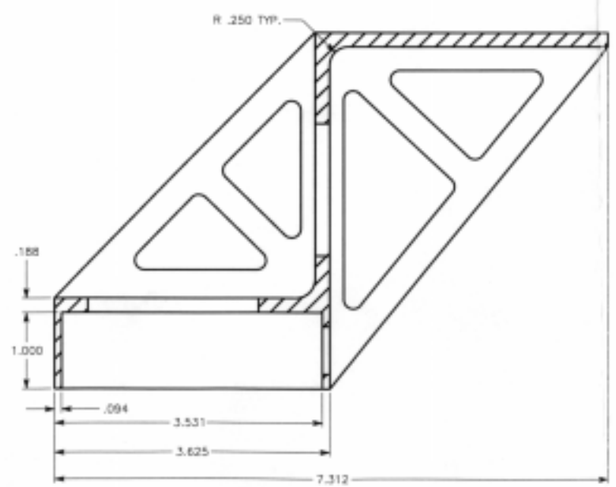

SHEET 2 OF 2
SCALE– HALF

NOTES:

5	
4	
3	DIMENSIONS SIMILAR FOR CUT–OUTS ON BOTH SIDES OF PART
2	BREAK ALL EDGES .005–.008 UNLESS OTHERWISE SPECIFIED
1	ALL DIMENSION TOLERANCES +/–.005 UNLESS OTHERWISE SPECIFIED

MATERIAL: AL 7075–T7	QUANTITY: 2	UNITS: INCHES
DRAWN BY: CHRIS VOORHEES	CONTACT: (818) 354–7994	
ASSEMBLY: TOP LEVEL ASSY.	DWG. NAME: ROVER / MAST INTERFACE	
SYSTEM: FIDO NAVIGATION MAST	DWG. NUMBER: 3802	