NOTES
1. ALL DIMENSIONS IN INCHES
2. TOLERANCES .XXX ±.002 AND .XXXX ±.0005 UNLESS NOTED
3. BREAK SHARP EDGES AND CORNERS .003–.005

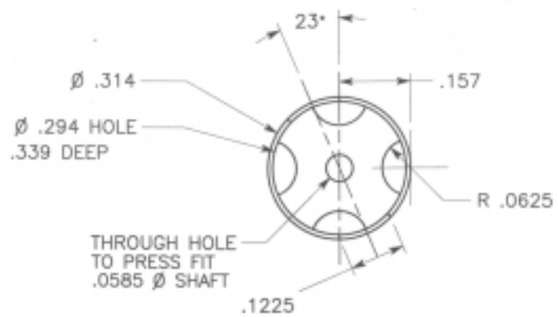

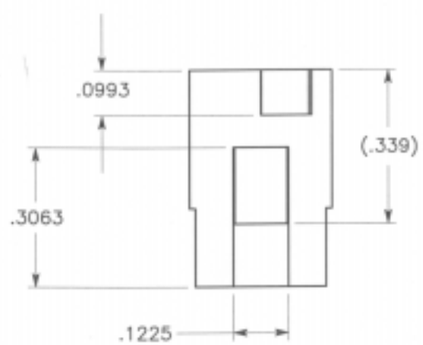

			DATE 4/27/98
DWG TITLE ROTOR			
SUBSYSTEM Detent Encoder Device			SYSTEM Drive & Steering Actuators, MSS
ENGINEER Lisa Reid		SECTION 352	PHONE 4–4796
SIZE B	PROJECT ET Rover		DWG NO. 4005
SCALE 3:1	MATERIAL 416 SS	QUANTITY 2	SHEET 1 of 1