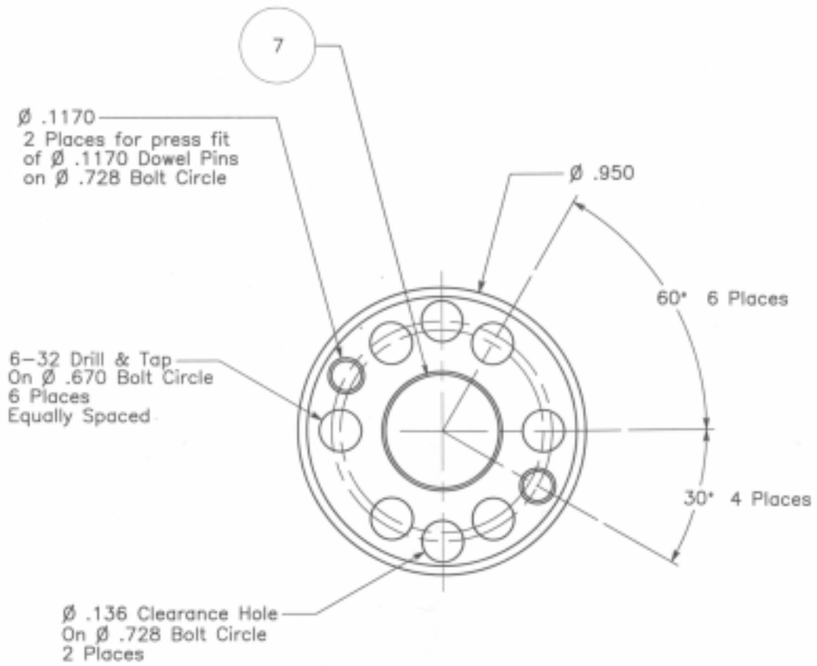

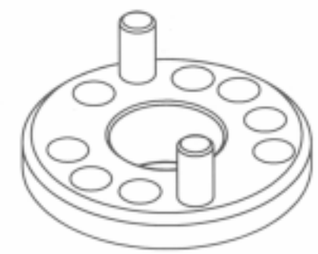

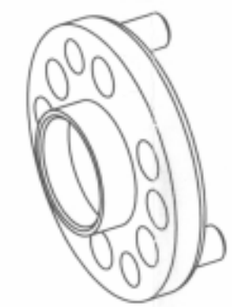

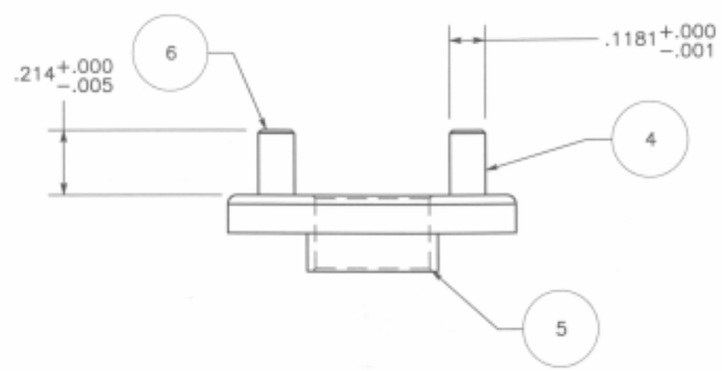

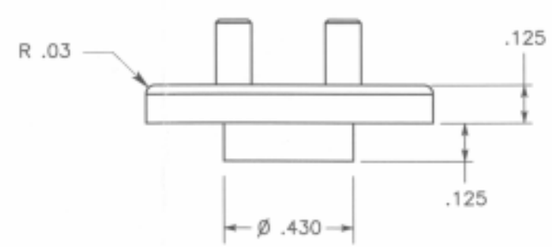

NOTES
1. ALL DIMENSION IN INCHES
2. TOLERANCES .XXX ±.005 UNLESS NOTED
3. BREAK SHARP EDGES AND CORNERS .003–.005
4. PINS SHOULD BE POSITIONED TO A SLIP FIT THROUGH HARMONIC DRIVE WITH 2 M3 SCREWS THROUGH CLEARANCE HOLES
5. CHAMFER BOTH SIDES ~0.010 AT 45 DEG
6. CHAMFER PINS ~0.010 AT 45 DEG
7. Ø .375 NOMINAL HOLE, .0003–.0005 LIGHT PRESS FIT OF PROVIDED BEARING

			DATE 8/03/98
DWG TITLE HD CLAMPING PLATE			
SUBSYSTEM Wheel Drive Actuators			SYSTEM Mobility Subsystem
ENGINEER Lisa Reid		SECTION 352	PHONE 4-4796
SIZE B	PROJECT ET Rover		DWG NO. 4101
SCALE 2:1	MATERIAL 300 Series CRES	QUANTITY 15	SHEET 1 of 1