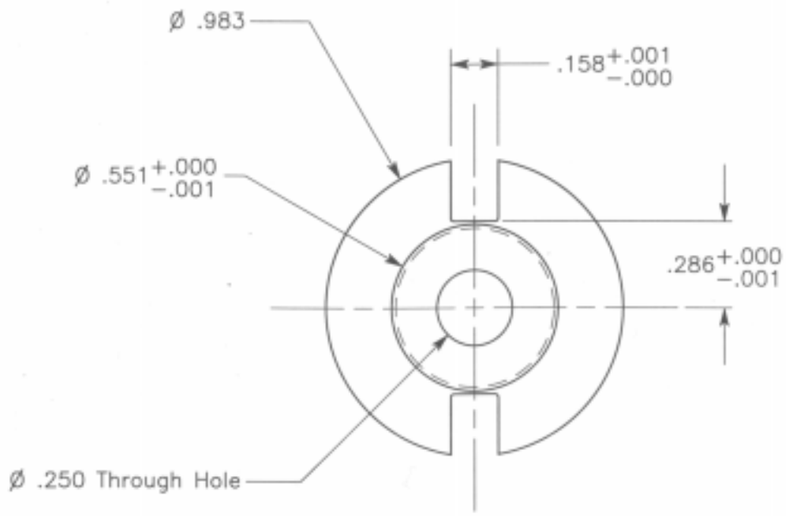

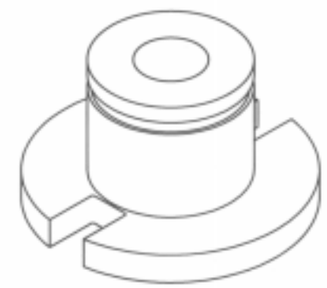

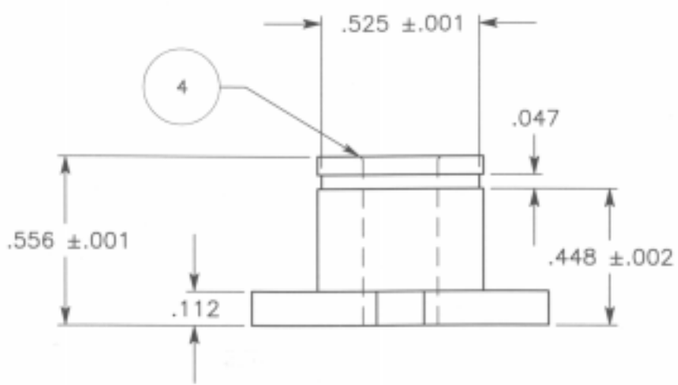

NOTES

1. ALL DIMENSION IN INCHES
2. TOLERANCES .XXX ±.005 UNLESS NOTED
3. BREAK SHARP EDGES AND CORNERS .003–.005
4. CHAMFER INNER EDGE .010

			DATE 8/21/98
DWG TITLE OLDHAM COUPLING			
SUBSYSTEM Harmonic Drive Wave Generator, Wheel Drive Actuators			SYSTEM Mobility Subsystem
ENGINEER Lisa Reid		SECTION 352	PHONE 4–4796
SIZE B	PROJECT ET Rover		DWG NO. 4102–1
SCALE 2:1	MATERIAL AL 7075–T7	QUANTITY 18	SHEET 1 of 2