NOTES
1. ALL DIMENSION IN INCHES
2. TOLERANCES .XXX ±.005 UNLESS NOTED
3. BREAK SHARP EDGES AND CORNERS .003–.005

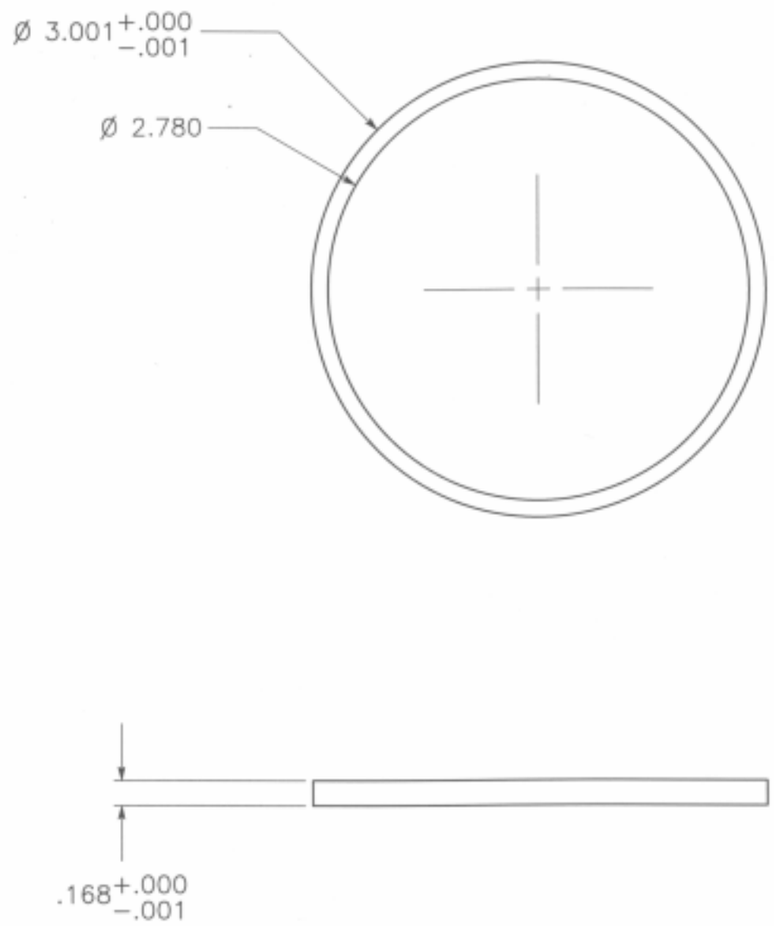

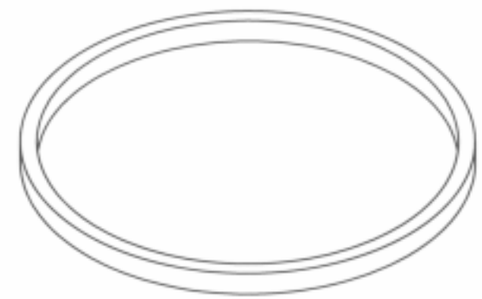

			DATE 8/21/98
DWG TITLE SHORT BEARING SEPARATOR			
SUBSYSTEM Wheel Drive Actuators			SYSTEM Mobility Subsystem
ENGINEER Lisa Reid		SECTION 352	PHONE 4–4796
SIZE B	PROJECT ET Rover		DWG NO. 4105
SCALE 1:1	MATERIAL Delrin	QUANTITY 15	SHEET 1 of 1