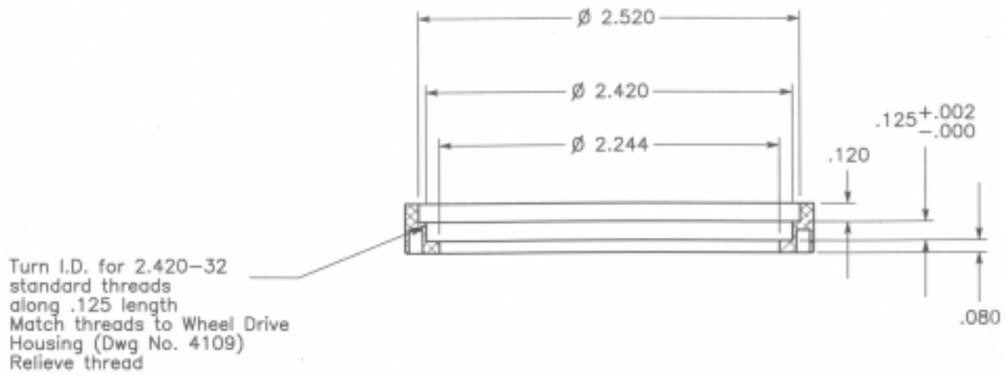

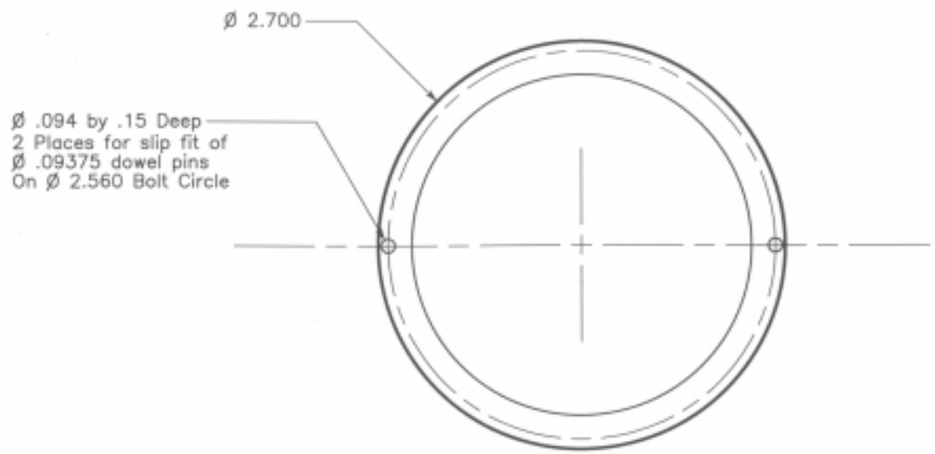

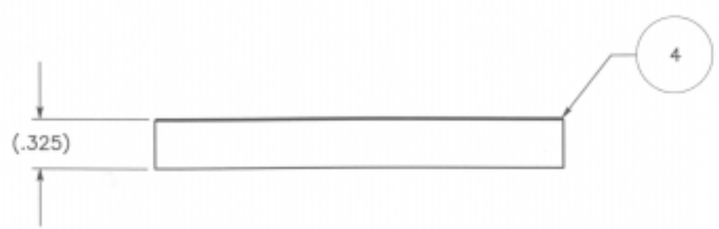

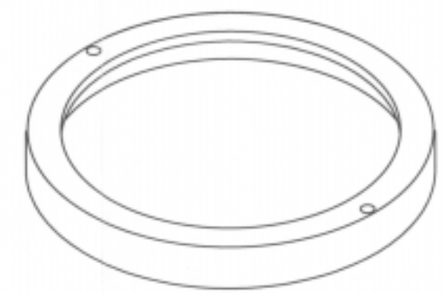

NOTES
1. ALL DIMENSION IN INCHES
2. TOLERANCES .XXX ±.005 UNLESS NOTED
3. BREAK SHARP EDGES AND CORNERS .003−.005
4. CHAMFER EDGE .010

			DATE 8/25/98
DWG TITLE BEARING RETAINER			
SUBSYSTEM Wheel Drive Actuators			SYSTEM Mobility Subsystem
ENGINEER Lisa Reid		SECTION 352	PHONE 4−4796
SIZE B	PROJECT ET Rover		DWG NO. 4108
SCALE 1:1	MATERIAL AL 7075−T7	QUANTITY 15	SHEET 1 of 1