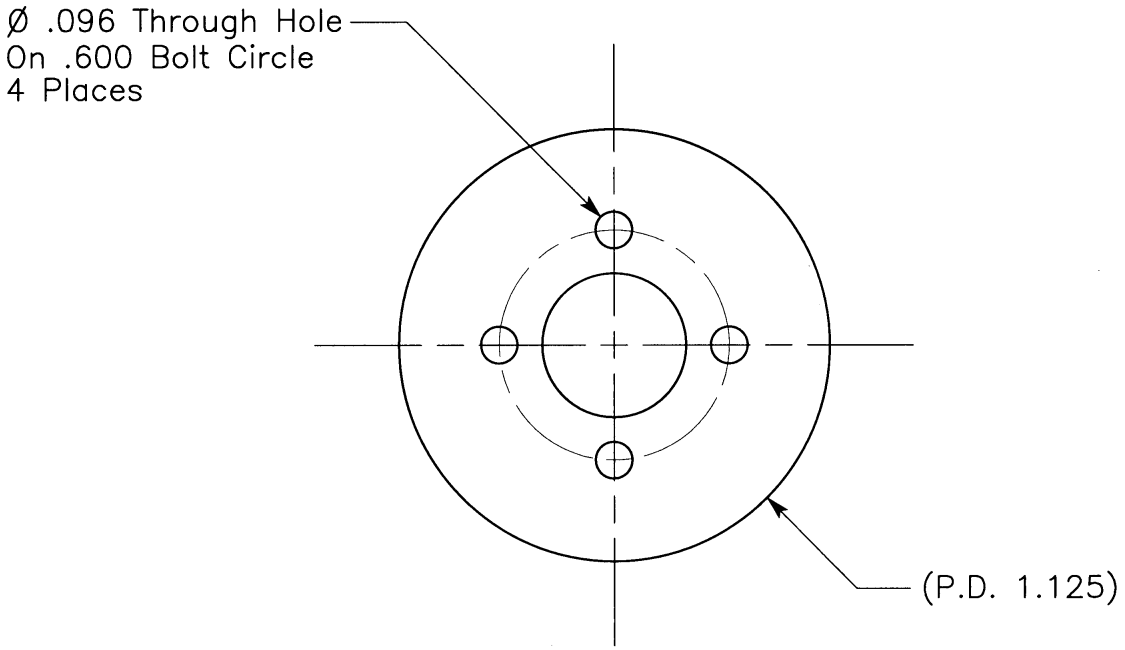

Modified Spur Gear
Berg F64A3–72
Quantity: 20

Dimensions in Inches
Tolerances ± .005
Drwg Scale 2:1

Wheel Drive Spur Gear
Mobility Subsystem
ET Rover
Dwg No. 4110

Contact: Lisa Reid
JPL
(818)354–4796