| NOTES |
| --- |
| 1. ALL DIMENSION IN INCHES |
| 2. TOLERANCES .XXX ±.005 UNLESS NOTED |
| 3. BREAK SHARP EDGES AND CORNERS .003–.005 |
| 4. FILLET INNER EDGE .005 |

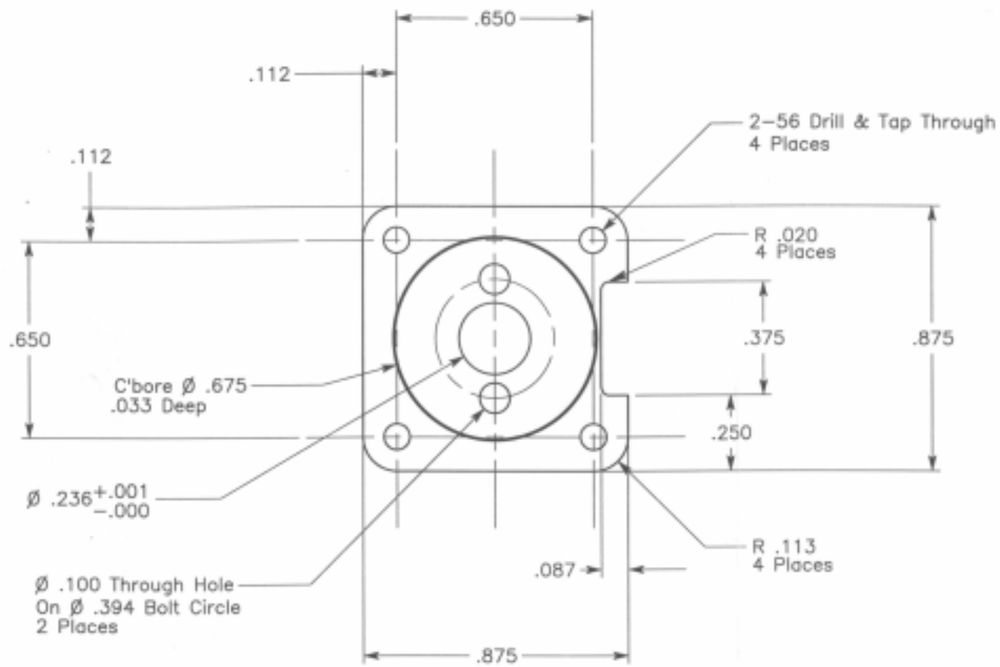


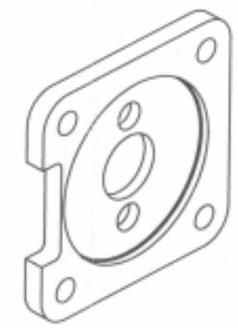

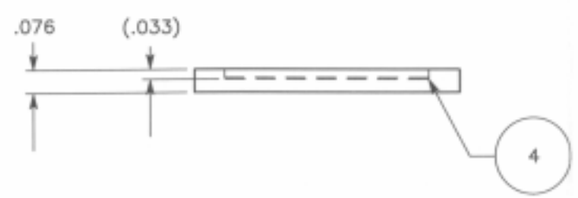


| | | | |
| --- | --- | --- | --- |
| | | | DATE 8/24/98 |
| DWG TITLE MOTOR MOUNT | | | |
| SUBSYSTEM Steering Drive Actuators | | | SYSTEM Mobility Subsystem |
| ENGINEER Lisa Reid | | SECTION 352 | PHONE 4–4796 |
| SIZE B | PROJECT ET Rover | | DWG NO. 4202 |
| SCALE 2:1 | MATERIAL AL 7075–t7 | QUANTITY 15 | SHEET 1 of 1 |

| NOTES |
| --- |
| 1. ALL DIMENSION IN INCHES |
| 2. TOLERANCES .XXX ±.005 UNLESS NOTED |
| 3. BREAK SHARP EDGES AND CORNERS .003–.005 |
| 4. FILLET INNER EDGE .005 |

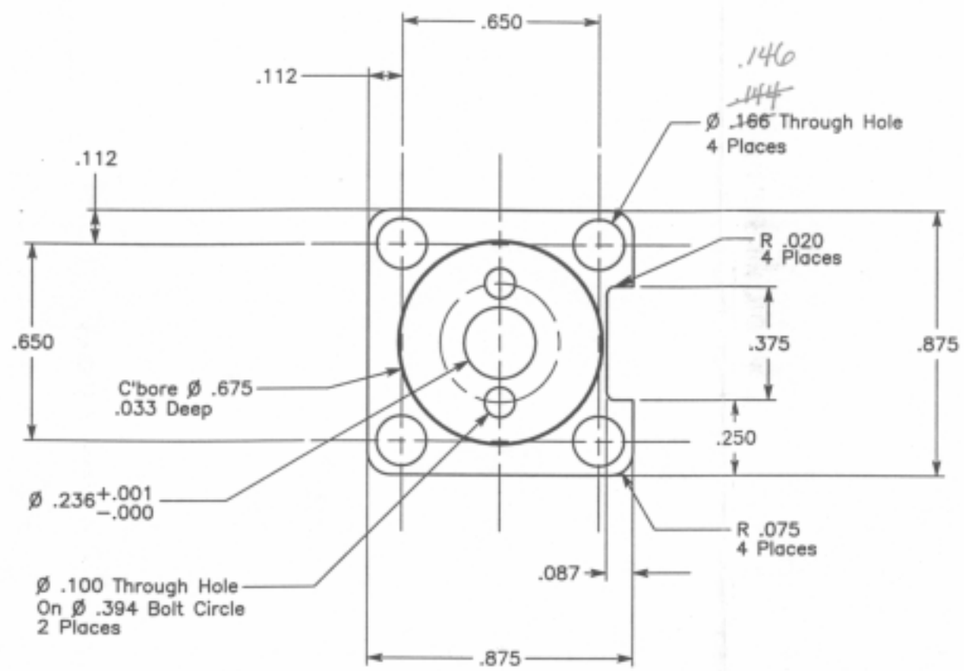


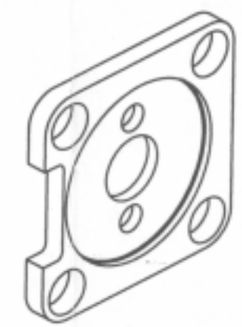

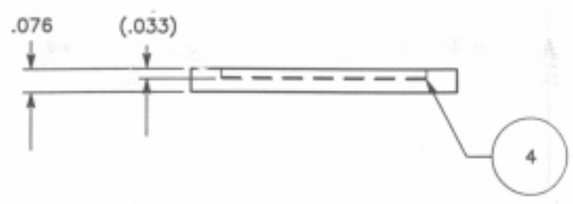


| | | | |
| --- | --- | --- | --- |
| DATE 8/24/98 | | | |
| DWG TITLE MOTOR MOUNT | | | |
| SUBSYSTEM Steering Drive Actuators | | | SYSTEM Mobility Subsystem |
| ENGINEER Lisa Reid | SECTION 352 | | PHONE 4–4796 |
| SIZE B | PROJECT ET Rover | | DWG NO. 4202 |
| SCALE 2:1 | MATERIAL AL 7075–t7 | QUANTITY 15 | SHEET 1 of 1 |