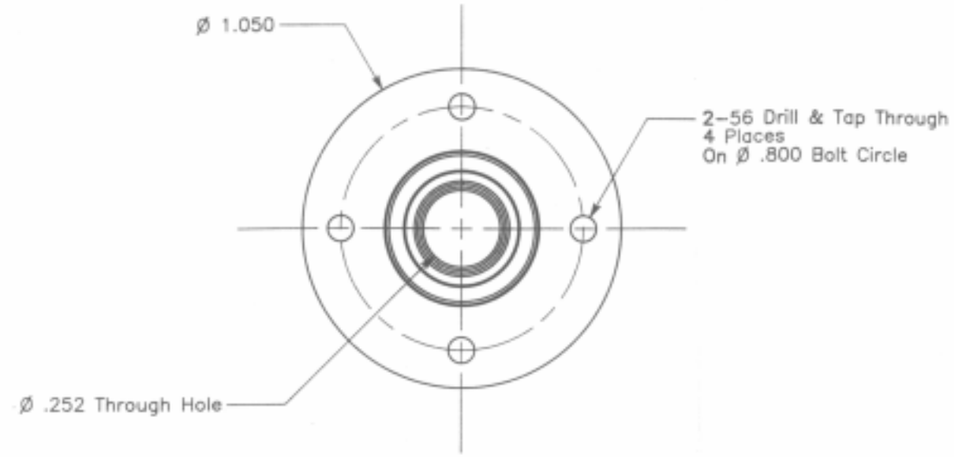

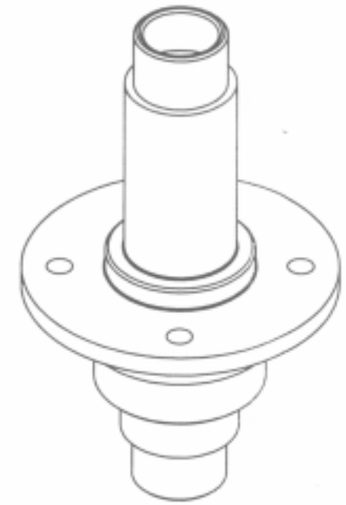

NOTES

1. ALL DIMENSION IN INCHES
2. TOLERANCES .XXX ±.005 UNLESS NOTED
3. BREAK SHARP EDGES AND CORNERS .003–.005
4. TURN O.D. FOR .392–32 STANDARD THREADS ALONG .196 LENGTH MATCH THREAD TO WAVE GENERATOR RETAINER (DWG NO. 4204) RELIEVE THREAD TO Ø .338
5. CHAMFER FOUR OUTER EDGES .010–.015
6. CHAMFER TWO INSIDE EDGES .010–.015

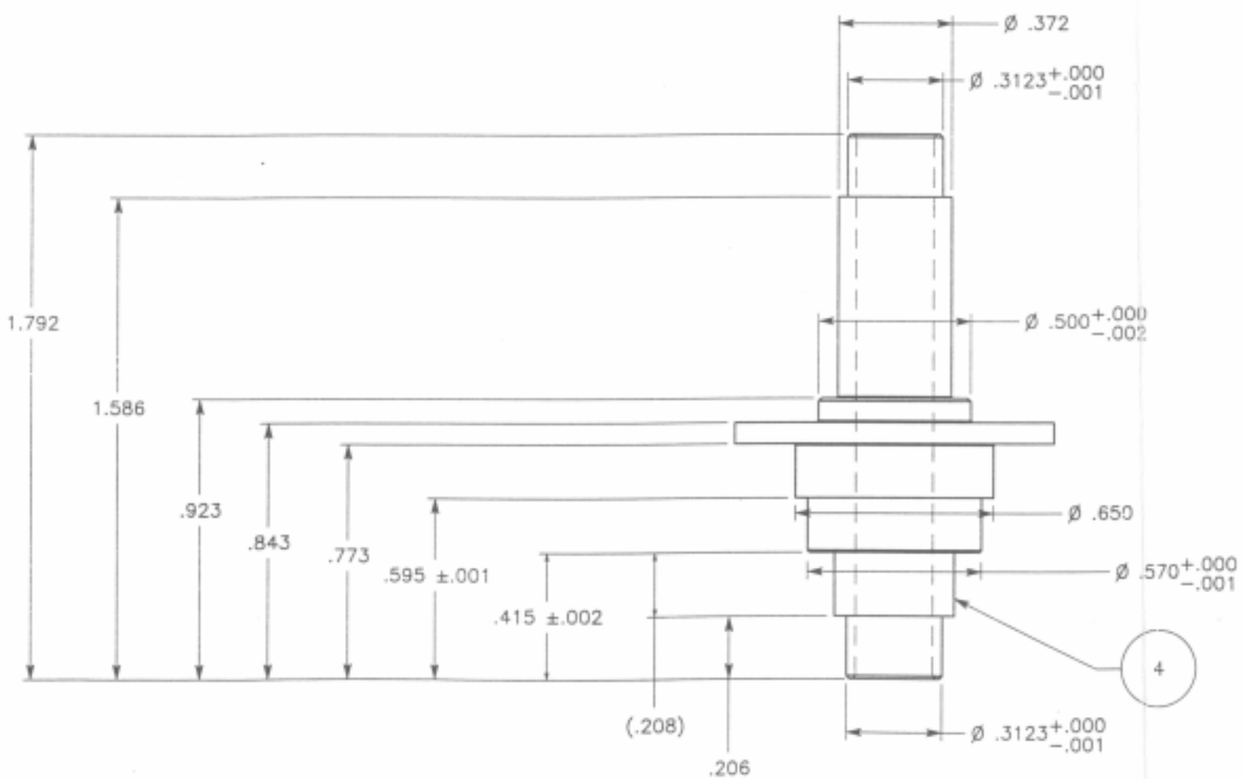

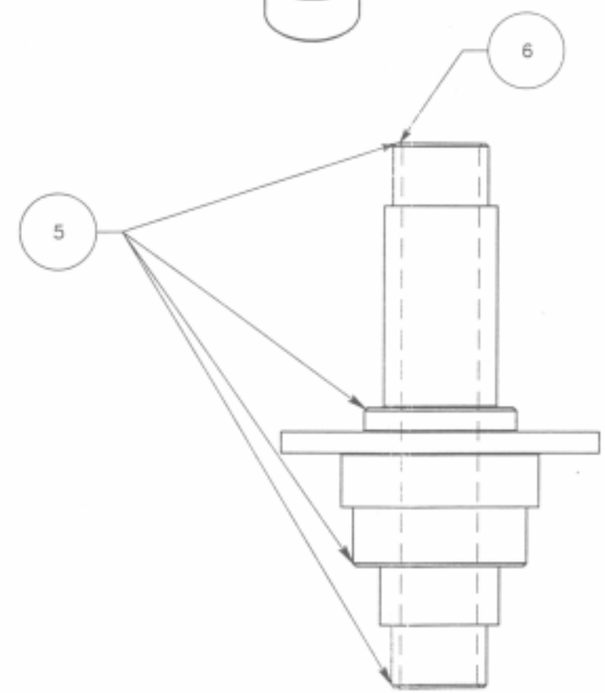

DATE 8/25/98			
DWG TITLE STEERING SHAFT			
SUBSYSTEM Steering Drive Actuators			SYSTEM Mobility Subsystem
ENGINEER Lisa Reid		SECTION 352	PHONE 4-4796
SIZE B	PROJECT ET Rover		DWG NO. 4203
SCALE 2:1	MATERIAL 300 Series CRES	QUANTITY 15	SHEET 1 of 1