NOTES
1. ALL DIMENSION IN INCHES
2. TOLERANCES .XXX ±.005 UNLESS NOTED
3. BREAK SHARP EDGES AND CORNERS .003–.005

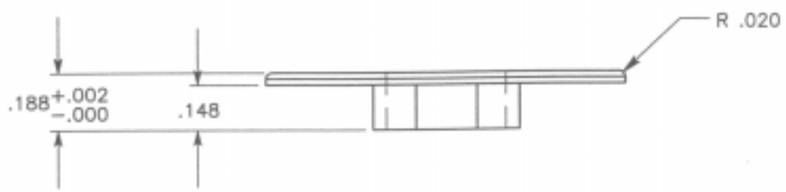

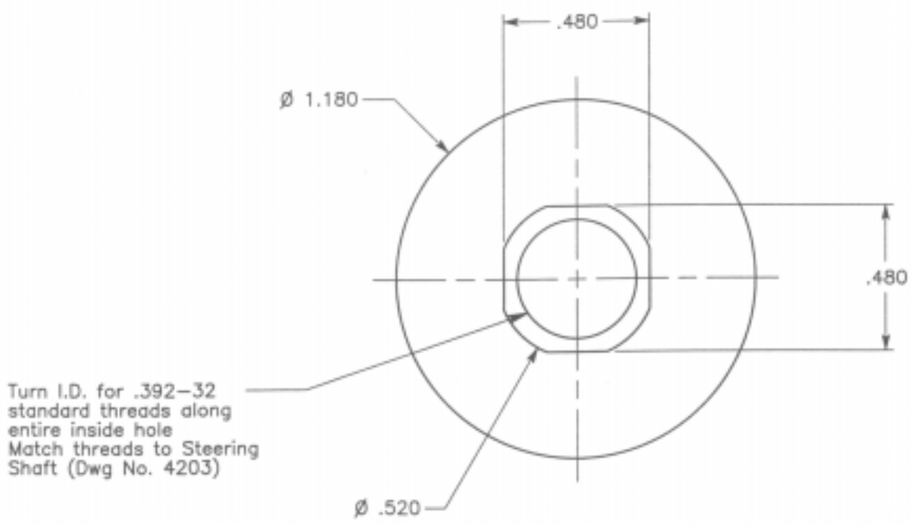

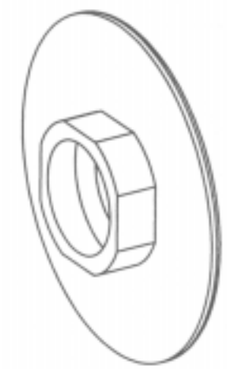

DATE 8/25/98			
DWG TITLE WAVE GENERATOR RETAINER			
SUBSYSTEM Steering Drive Actuators			SYSTEM Mobility Subsystem
ENGINEER Lisa Reid		SECTION 352	PHONE 4–4796
SIZE B	PROJECT ET Rover		DWG NO. 4204
SCALE 2:1	MATERIAL 300 Series CRES	QUANTITY 15	SHEET 1 of 1