NOTES
1. ALL DIMENSION IN INCHES
2. TOLERANCES .XXX ±.005 UNLESS NOTED
3. BREAK SHARP EDGES AND CORNERS .003–.005
4. CHAMFER CORNER .050, 2 PLACES
5. CHAMFER EDGES .010–.015

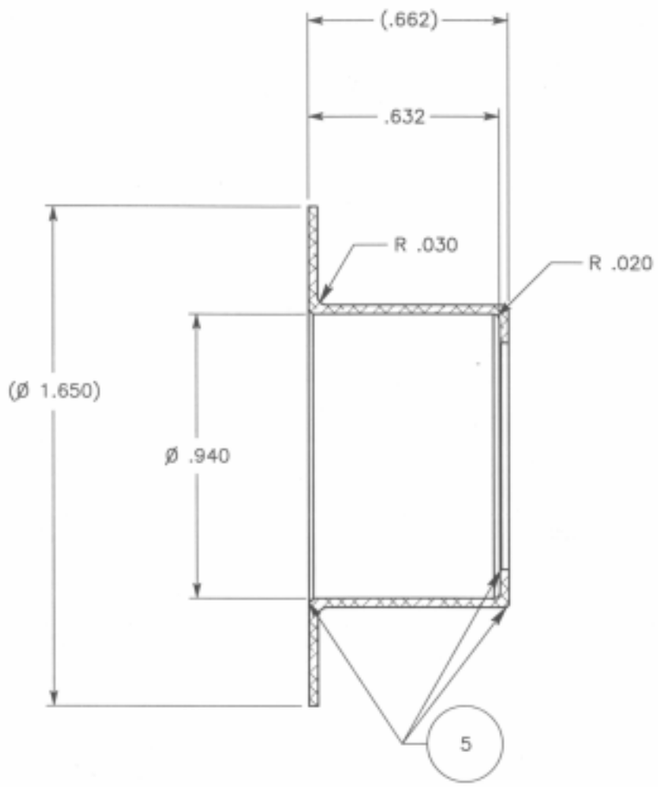

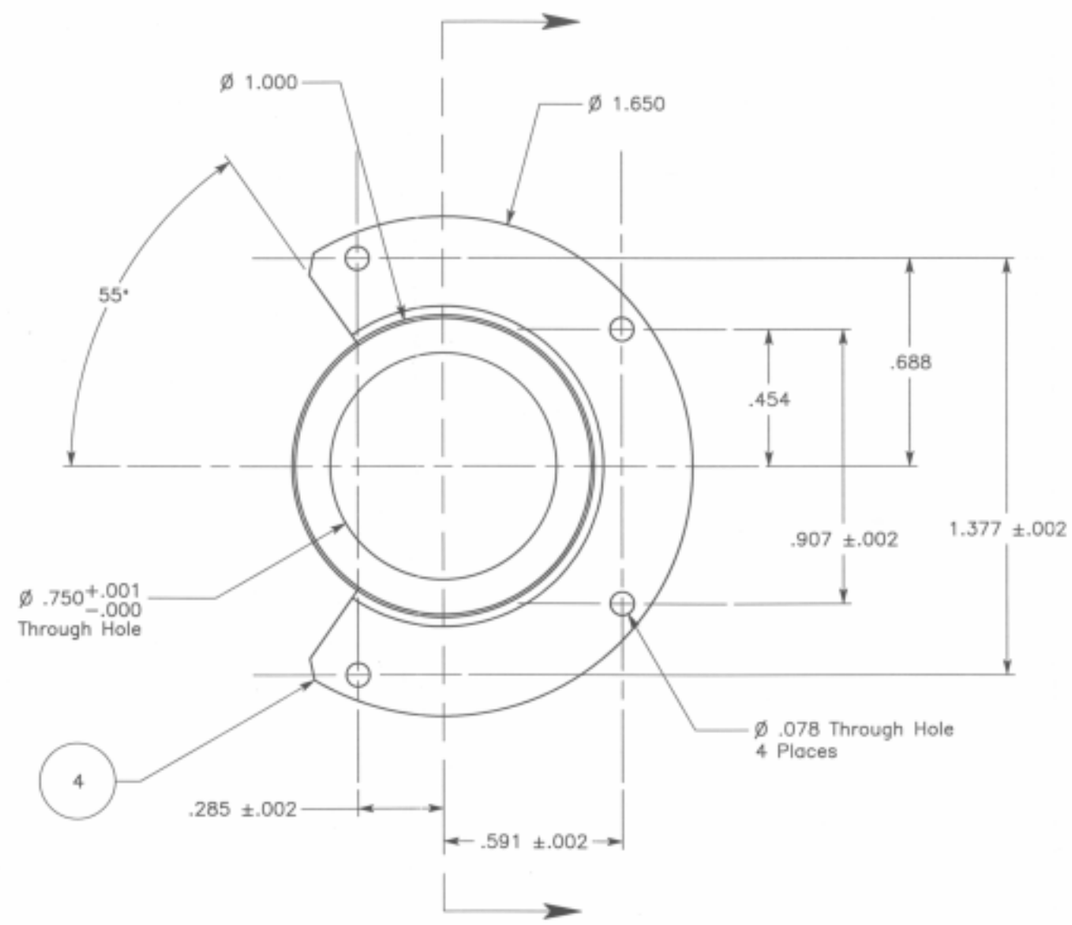

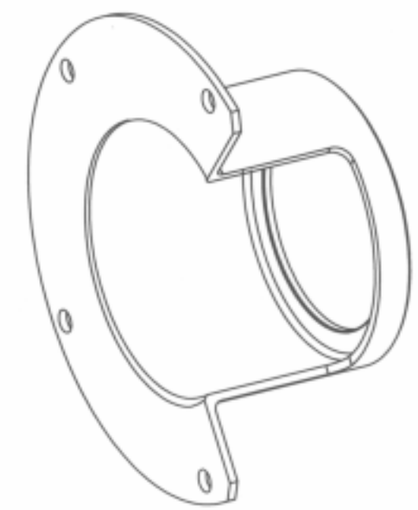

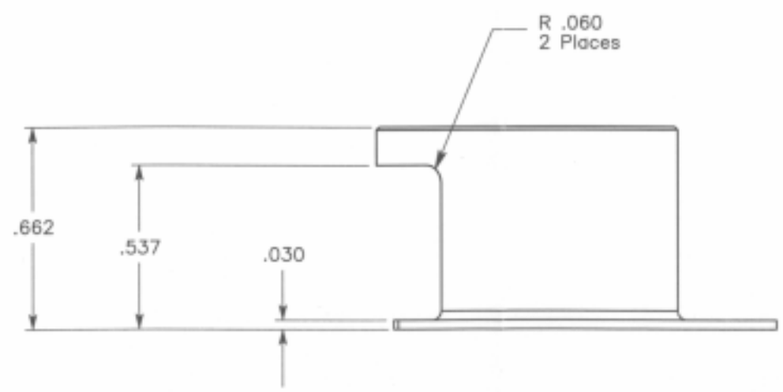

			DATE 8/25/98
DWG TITLE POTENTIOMETER HOLDER			
SUBSYSTEM Steering Drive Actuators			SYSTEM Mobility Subsystem
ENGINEER Lisa Reid		SECTION 352	PHONE 4–4796
SIZE B	PROJECT ET Rover		DWG NO. 4205
SCALE 2:1	MATERIAL AL 7075–T7	QUANTITY 15	SHEET 1 of 1