NOTES
1. ALL DIMENSION IN INCHES
2. TOLERANCES .XXX ±.005 UNLESS NOTED
3. BREAK SHARP EDGES AND CORNERS .003–.005
4. CHAMFER INSIDE EDGE .012–.015

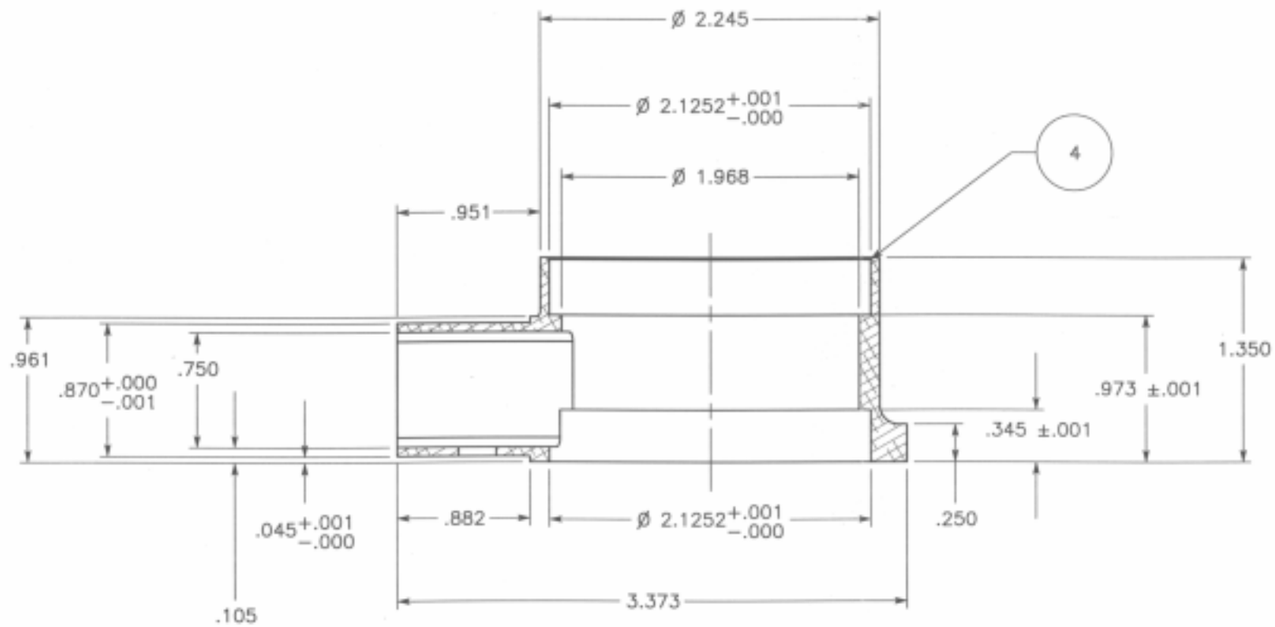

Section A–A

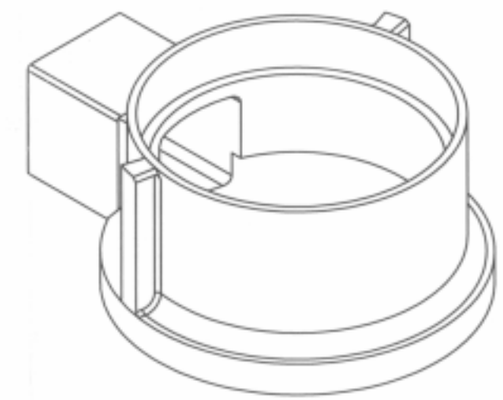

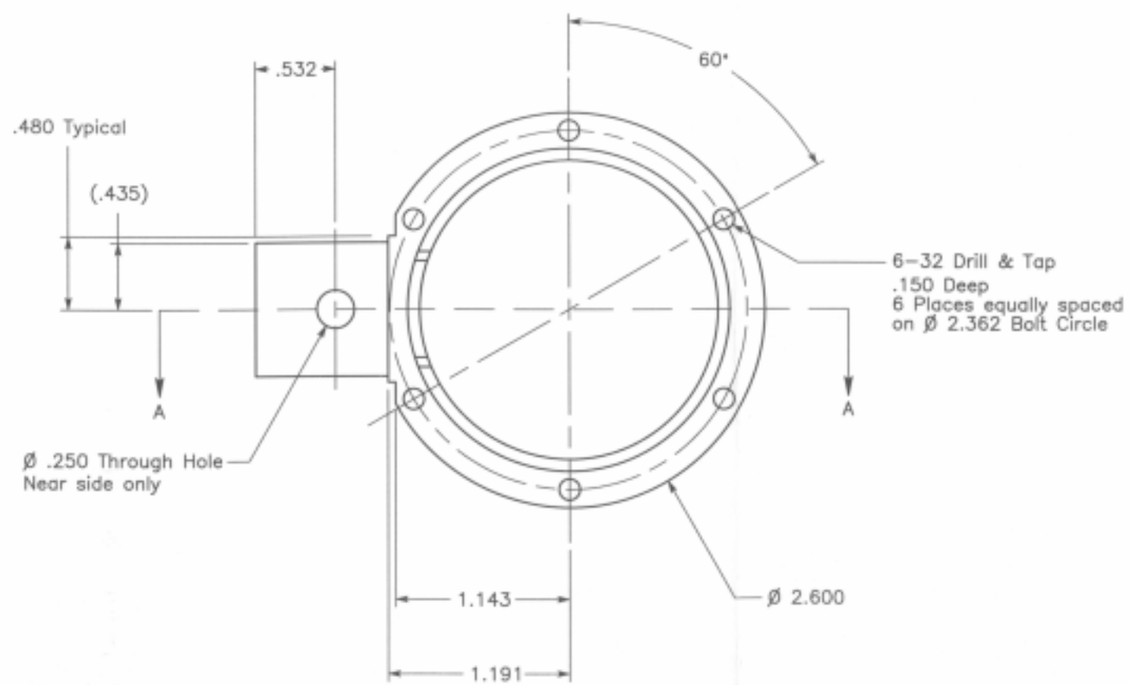

DATE 8/25/98			
DWG TITLE STEERING HUB			
SUBSYSTEM Steering Drive Actuators			SYSTEM Mobility Subsystem
ENGINEER Lisa Reid	SECTION 352		PHONE 4–4796
SIZE B	PROJECT ET Rover		DWG NO. 4208
SCALE 1:1	MATERIAL AL 7075–T7	QUANTITY 15	SHEET 1 of 2

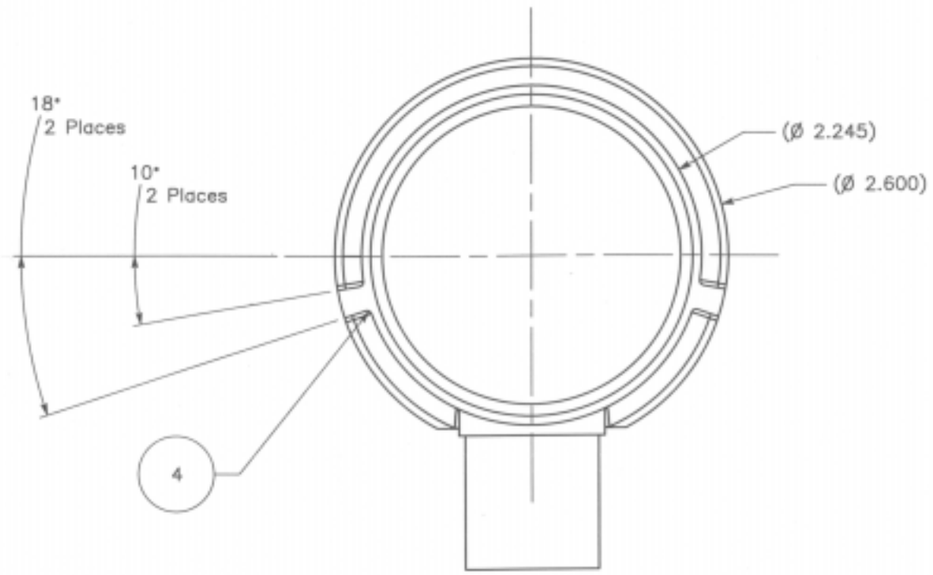

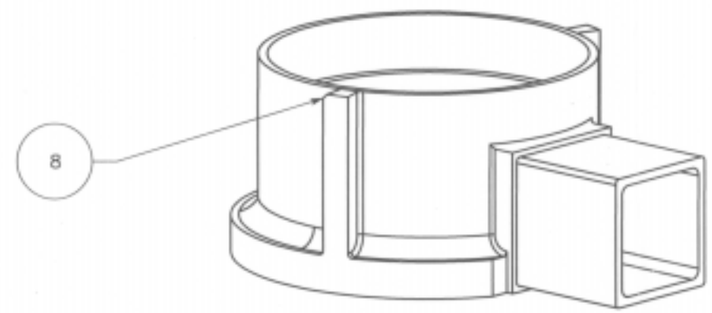

NOTES
1. ALL DIMENSION IN INCHES
2. TOLERANCES .XXX ±.005 UNLESS NOTED
3. BREAK SHARP EDGES AND CORNERS .003–.005
4. FILLET FOUR EDGES .030
5. FILLET EDGE .030
6. FILLET EDGE .125
7. SURFACE FINISH AND ROUNDNESS TO BEST EFFORT
8. CHAMFER TOP CORNERS .030

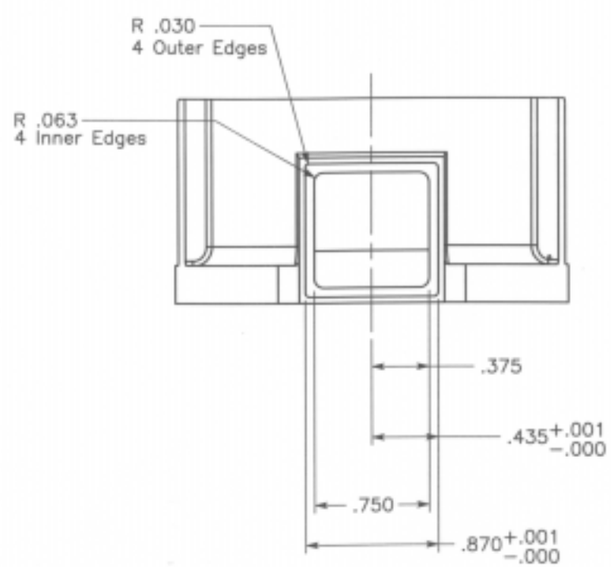

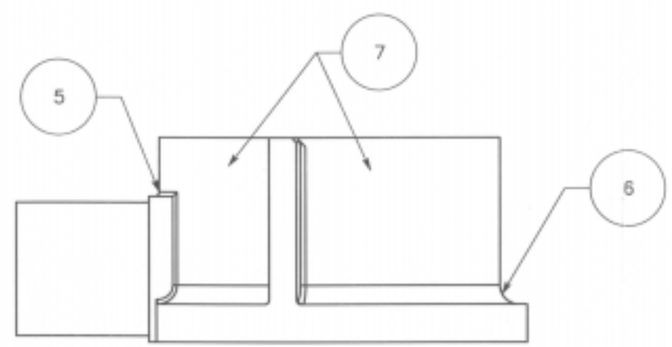

DATE 8/25/98			
DWG TITLE STEERING HUB			
SUBSYSTEM Steering Drive Actuators			SYSTEM Mobility Subsystem
ENGINEER Lisa Reid		SECTION 352	PHONE 4–4796
SIZE B	PROJECT ET Rover		DWG NO. 4208
SCALE 1:1	MATERIAL AL 7075–T7	QUANTITY 15	SHEET 2 of 2