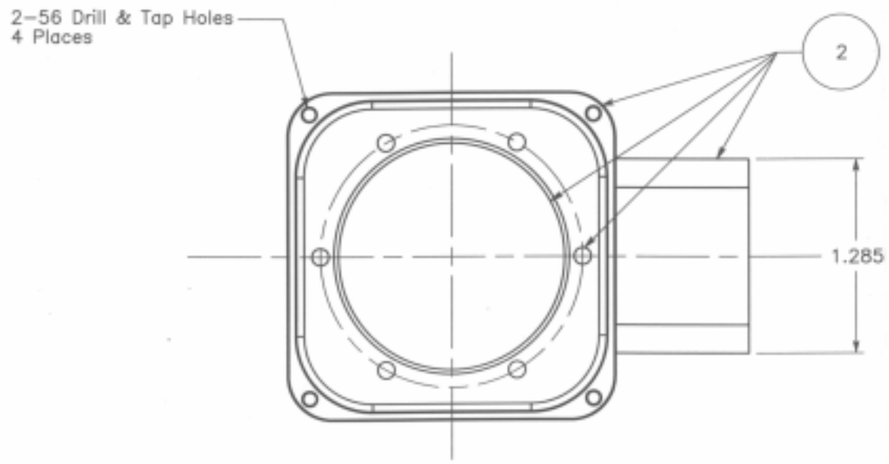

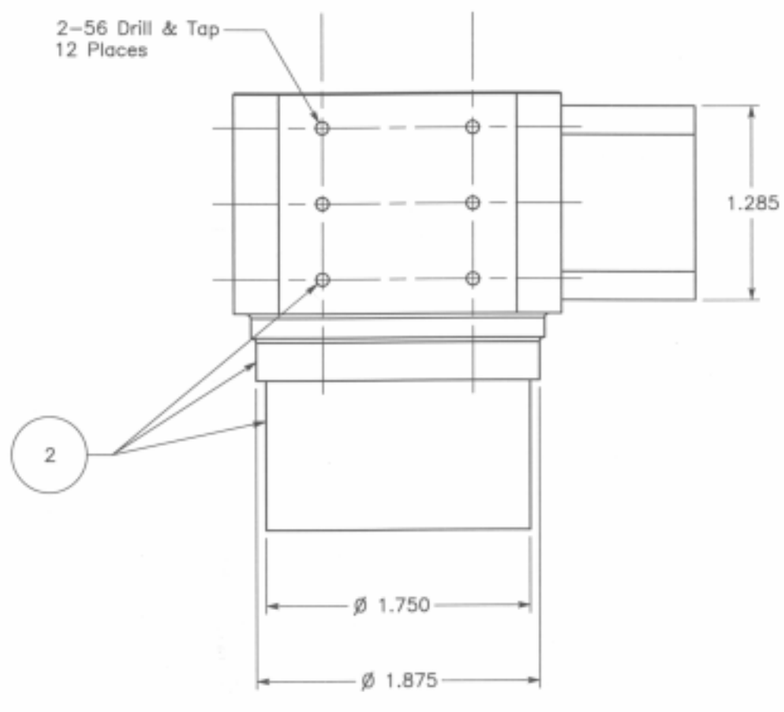

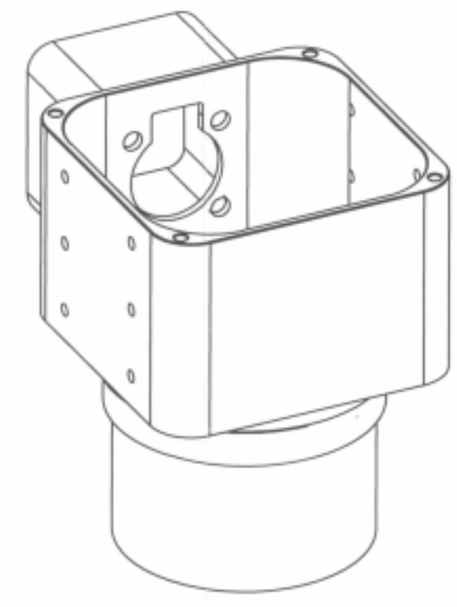

NOTES

1. ALL DIMENSION IN INCHES
2. MASK 12X 2-56 HOLES, OUTSIDE SURFACE OF Ø 1.875 FEATURE, OUTSIDE SURFACE OF Ø 1.750 FEATURE, 1.285 SQUARE FEATURE, 4X 2-56 HOLES, AND ALL INSIDE FEATURES
3. ANODIZE PER MIL-4-8625, TYPE II, CLASS 2, COLOR BLUE EXCEPT WHERE INDICATED PER NOTE 2.

DATE 7/26/99			
DWG TITLE STEERING HOUSING			
SUBSYSTEM Steering Drive Actuators			SYSTEM Mobility Subsystem
ENGINEER Lisa Reid		SECTION 352	PHONE 4-4796
SIZE B	PROJECT ET Rover		DWG NO. 4209-1
SCALE 1:1	MATERIAL AL 7075-T7	QUANTITY 4	SHEET 1 of 1