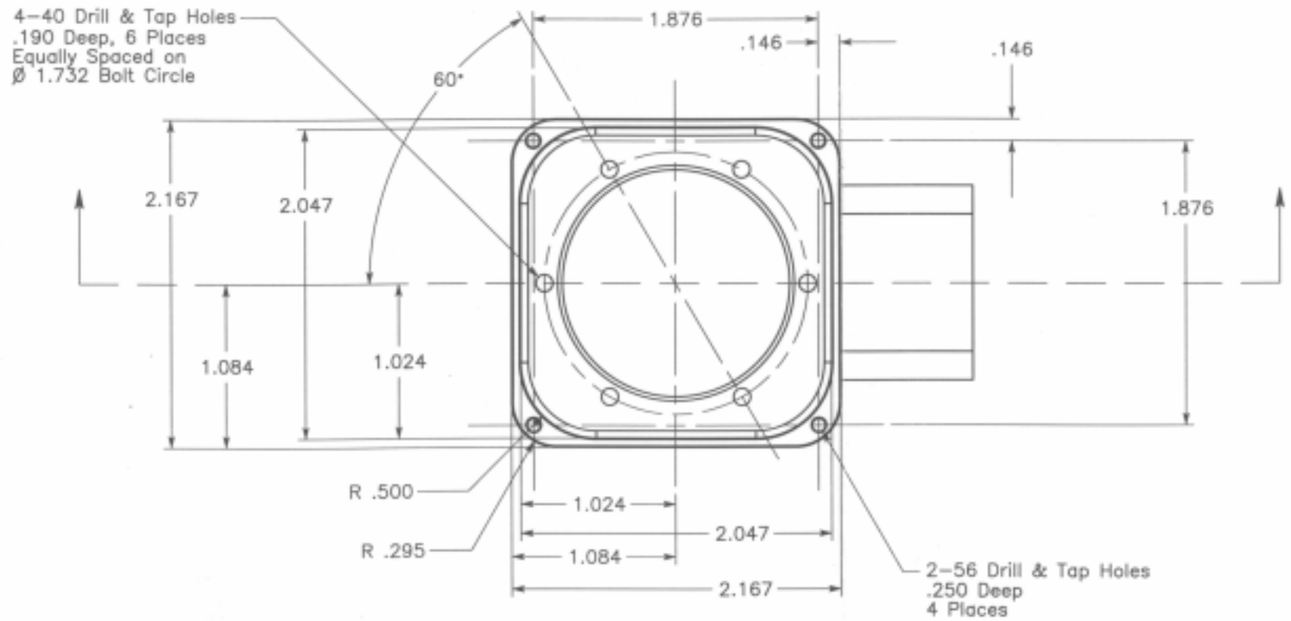

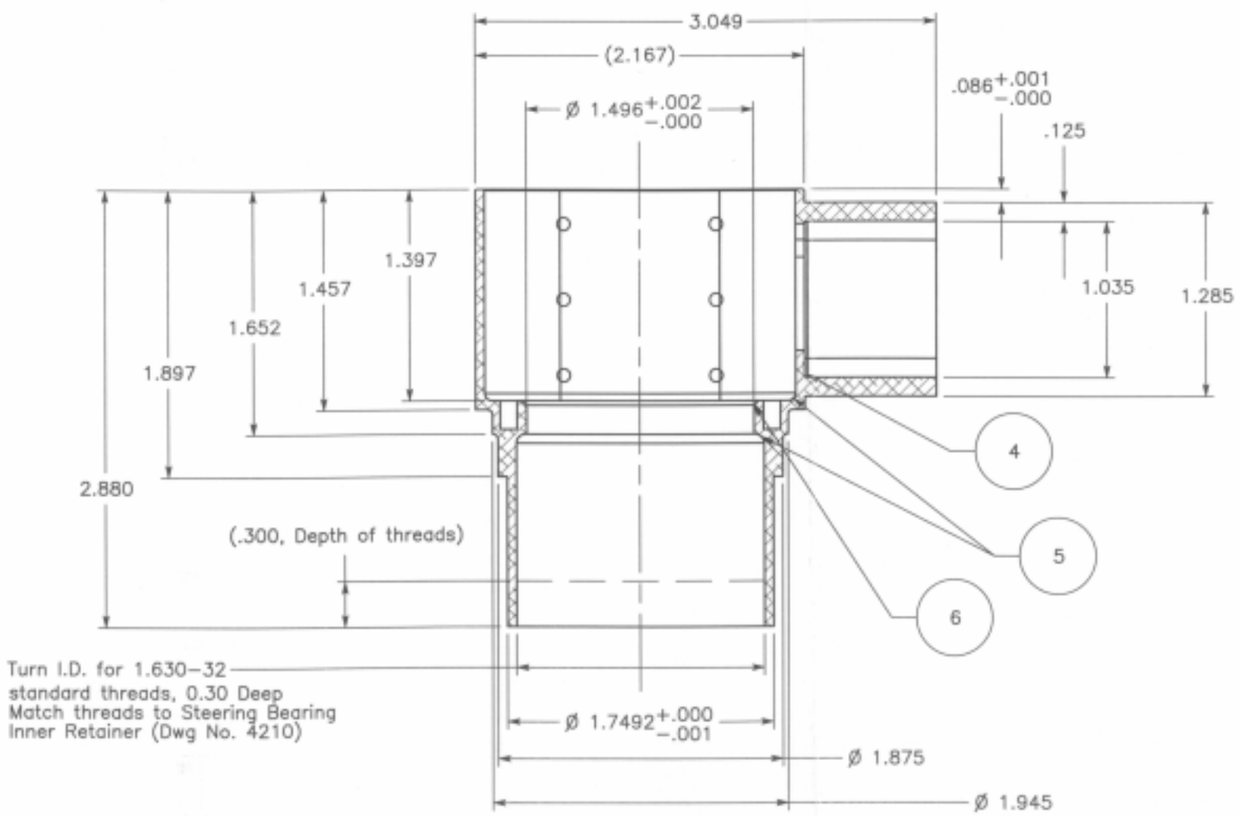

NOTES
1. ALL DIMENSION IN INCHES
2. TOLERANCES .XXX ±.005 UNLESS NOTED
3. BREAK SHARP EDGES AND CORNERS .003–.005
4. FILLET EDGE .020–.030
5. FILLET EDGE .050–.060
6. CHAMFER EDGE .015–.020

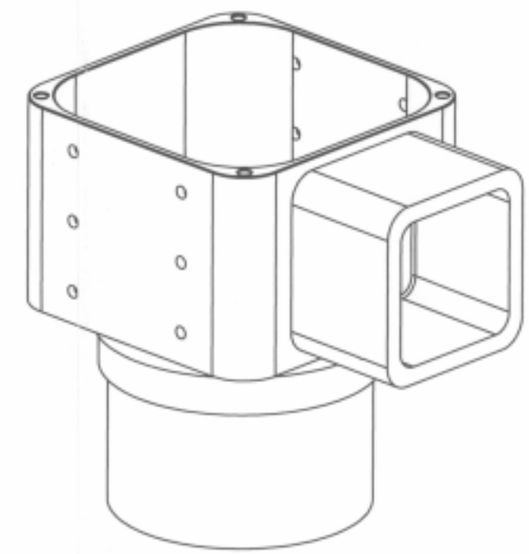

DWG TITLE: STEERING HOUSING			DATE: 8/25/98
SUBSYSTEM: Steering Drive Actuators			SYSTEM: Mobility Subsystem
ENGINEER: Lisa Reid	SECTION: 352		PHONE: 4–4796
SIZE: B	PROJECT: ET Rover		DWG NO.: 4209
SCALE: 1:1	MATERIAL: AL 7075–T7	QUANTITY: 15	SHEET: 1 of 2

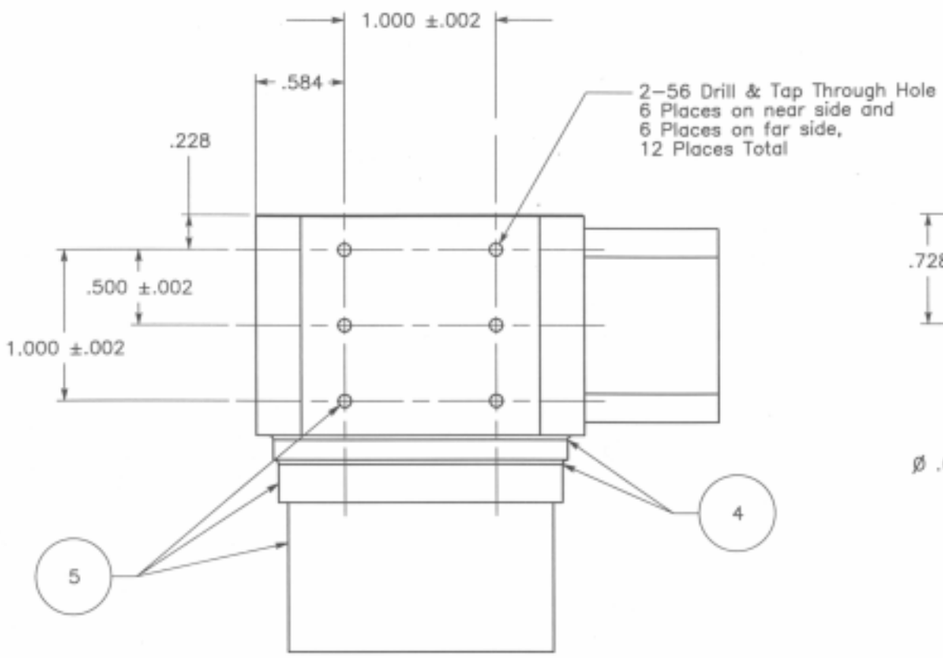

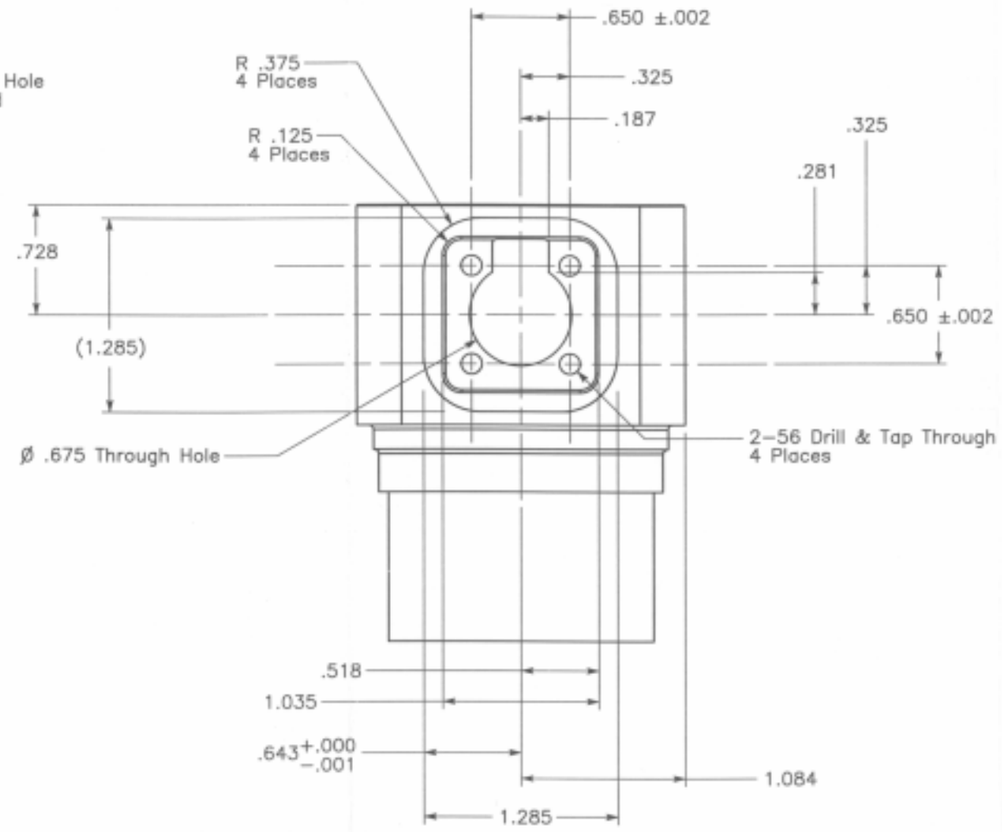

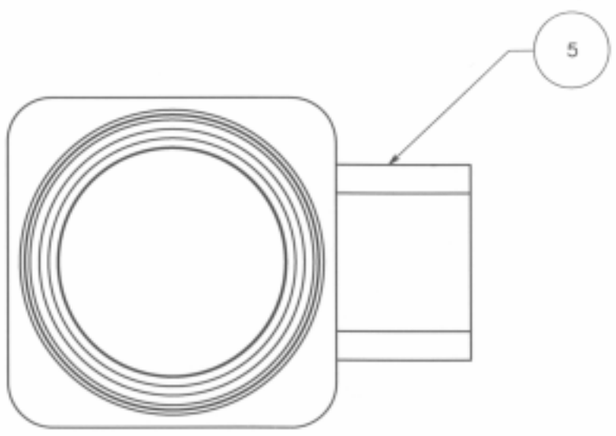

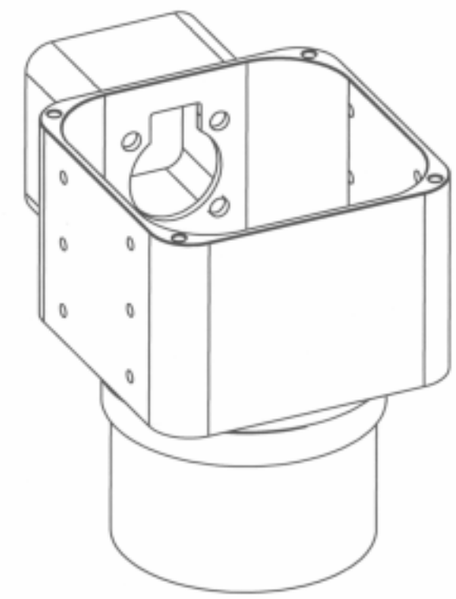

NOTES
1. ALL DIMENSION IN INCHES
2. TOLERANCES .XXX ±.005 UNLESS NOTED
3. BREAK SHARP EDGES AND CORNERS .003–.005
4. FILLET EDGES .015–.020
5. MASK 6X 2–56 HOLES, Ø 1.875 FEATURE, Ø 1.7492 FEATURE AND 1.285 SQUARE FEATURE.
6. ANODIZE PER MIL–4–8625, TYPE II, CLASS 2, COLOR BLUE EXCEPT WHERE INDICATED PER NOTE 5.

			DATE: 8/25/98
DWG TITLE: STEERING HOUSING			
SUBSYSTEM: Steering Drive Actuators			SYSTEM: Mobility Subsystem
ENGINEER: Lisa Reid		SECTION: 352	PHONE: 4–4796
SIZE: B	PROJECT: ET Rover		DWG NO.: 4209
SCALE: 1:1	MATERIAL: AL 7075–T7	QUANTITY: 15	SHEET: 2 of 2