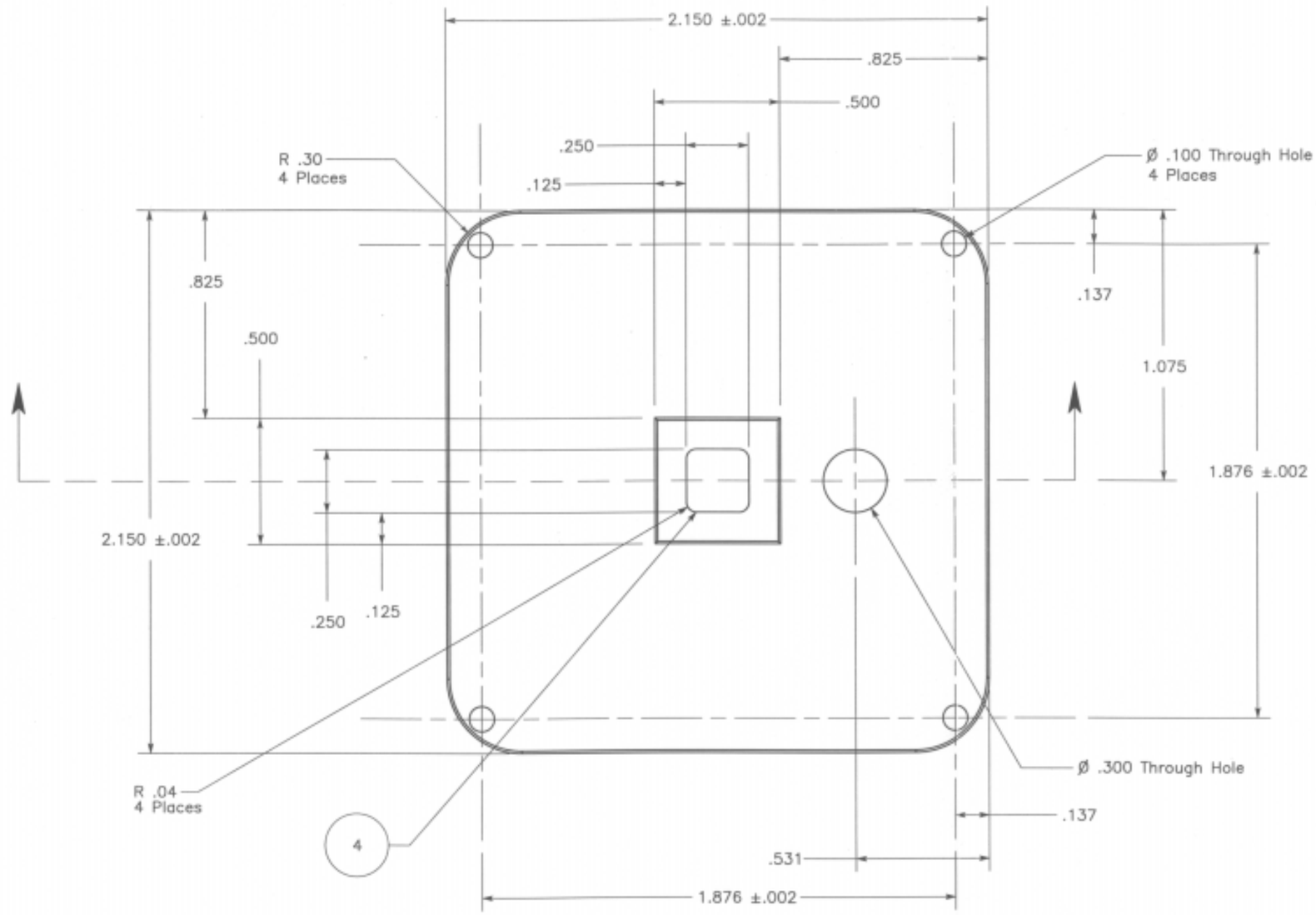

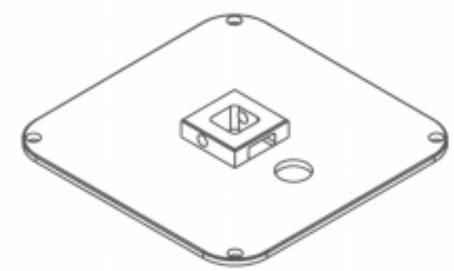

FULL SCALE

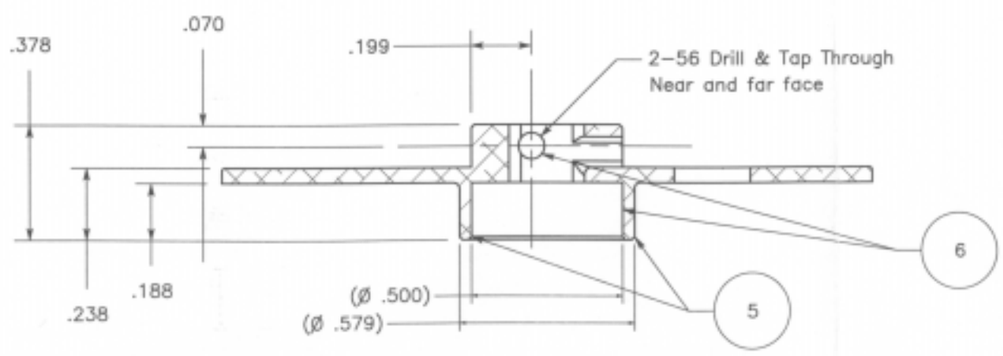

NOTES

1. ALL DIMENSION IN INCHES
2. TOLERANCES .XXX ±.005 UNLESS NOTED
3. BREAK SHARP EDGES AND CORNERS .003–.005
4. SQUARE SLOT DEPTH THROUGH
5. CHAMFER EDGES .010–.015
6. MASK 2–56 HOLES AND INSIDE SURFACE OF Ø .500 FEATURE.
7. ANODIZE PER MIL–A–8625, TYPE II, CLASS 2, COLOR BLUE, EXCEPT WHERE INDICATED PER NOTE 6.

			DATE: 8/25/98
DWG TITLE: STEERING HOUSING COVER			
SUBSYSTEM: Steering Drive Actuators			SYSTEM: Mobility Subsystem
ENGINEER: Lisa Reid		SECTION: 352	PHONE: 4–4796
SIZE: B	PROJECT: ET Rover		DWG NO.: 4212
SCALE: 2:1	MATERIAL: AL 7075–T7	QUANTITY: 15	SHEET: 1 of 2

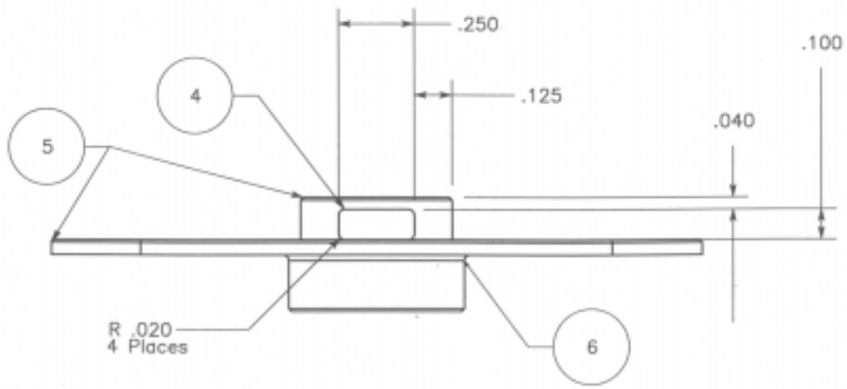

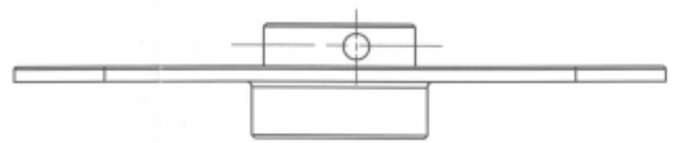

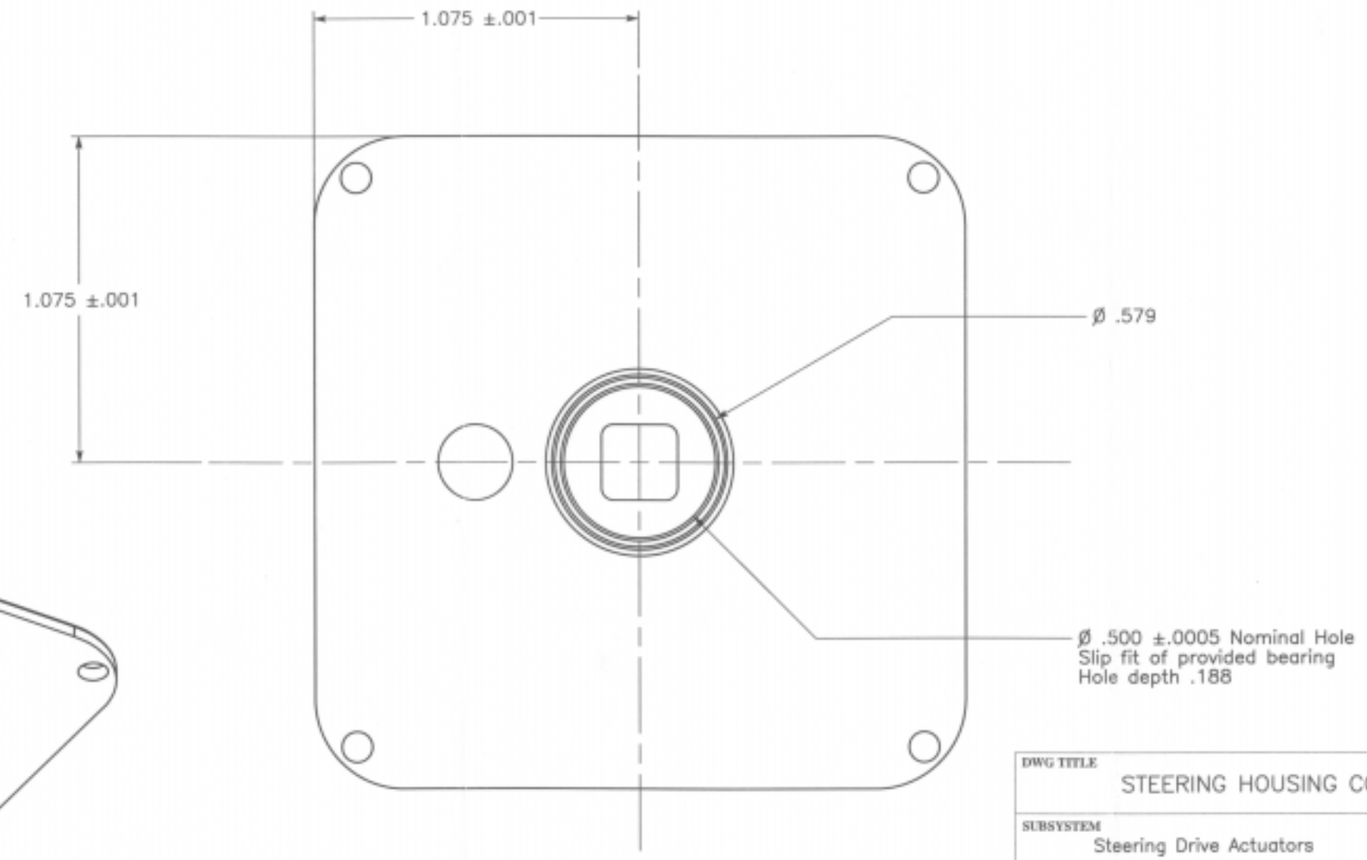

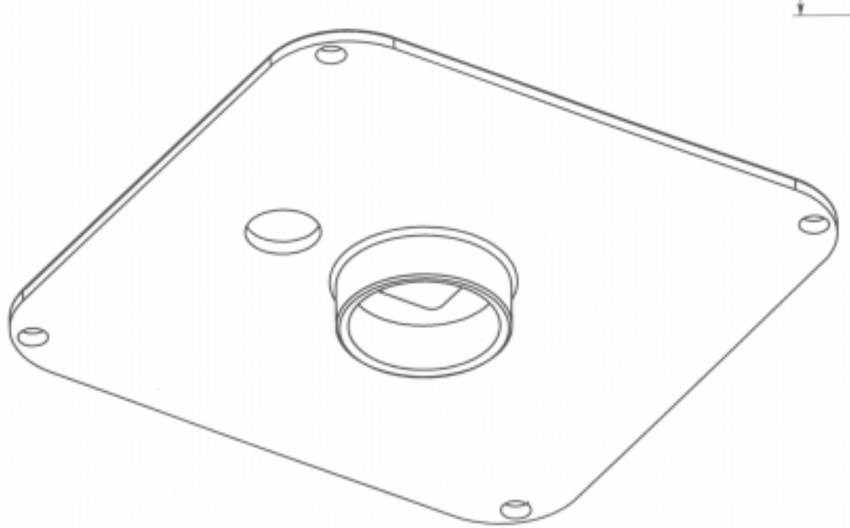

NOTES
1. ALL DIMENSION IN INCHES
2. TOLERANCES .XXX ±.005 UNLESS NOTED
3. BREAK SHARP EDGES AND CORNERS .003–.005
4. RECTANGULAR SLOT DEPTH THROUGH ONE WALL ONLY
5. CHAMFER EDGES .010–.015
6. FILLET EDGE .020–.025

			DATE 8/25/98
DWG TITLE STEERING HOUSING COVER			
SUBSYSTEM Steering Drive Actuators			SYSTEM Mobility Subsystem
ENGINEER Lisa Reid		SECTION 352	PHONE 4–4796
SIZE B	PROJECT ET Rover		DWG NO. 4212
SCALE 2:1	MATERIAL AL 7075–T7	QUANTITY 15	SHEET 2 of 2