NOTES
1. ALL DIMENSION IN INCHES
2. TOLERANCES .XXX ±.005 UNLESS NOTED

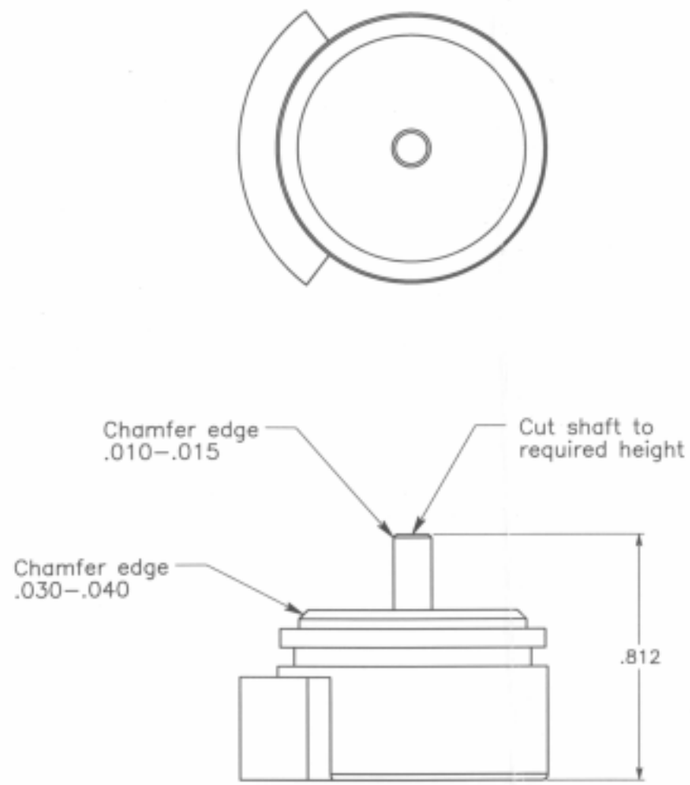

DATE 8/21/98			
DWG TITLE MODIFIED POTENTIOMETER			
SUBSYSTEM Steering Drive Actuators			SYSTEM Mobility Subsystem
ENGINEER Lisa Reid		SECTION 352	PHONE 4–4796
SIZE B	PROJECT ET Rover		DWG NO. 4215
SCALE 2:1	MATERIAL Provided	QUANTITY 15	SHEET 1 of 1