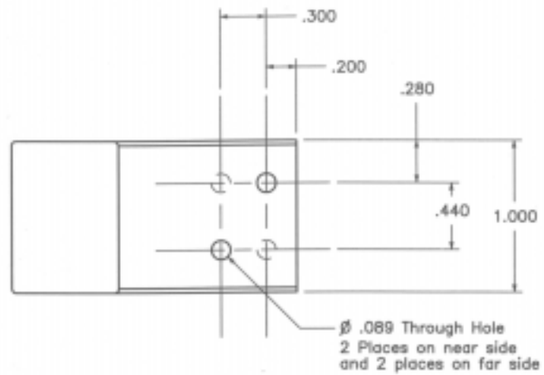

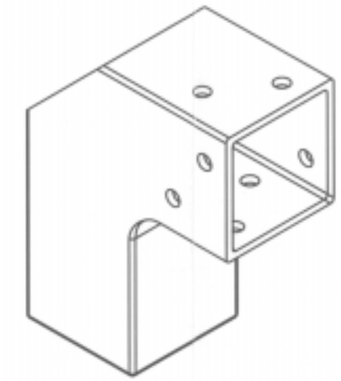

NOTES
1. ALL DIMENSION IN INCHES
2. TOLERANCES .XXX ±.005 UNLESS NOTED
3. BREAK SHARP EDGES AND CORNERS .003–.005
4. FILLET INNER AND OUTER EDGES .030
5. MASK INSIDE SURFACE OF .880 SQUARE FEATURE ALONG .900 LENGTH AND OUTSIDE SURFACE OF 1.000 SQUARE FEATURE ALONG .950 LENGTH
6. ANODIZE PER MIL–4–8625, TYPE II, CLASS 2, COLOR CLEAR EXCEPT WHERE INDICATED PER NOTE 5.

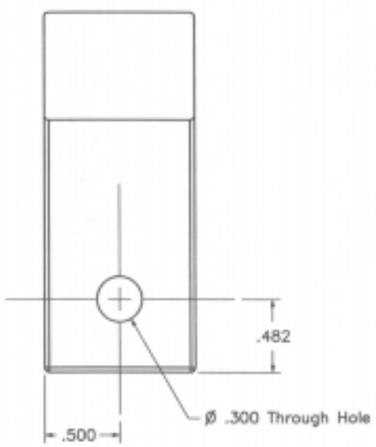

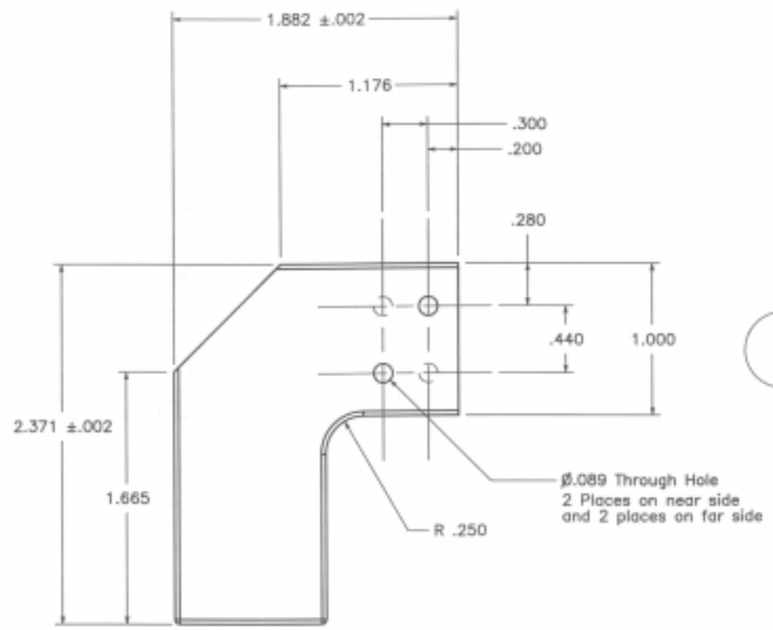

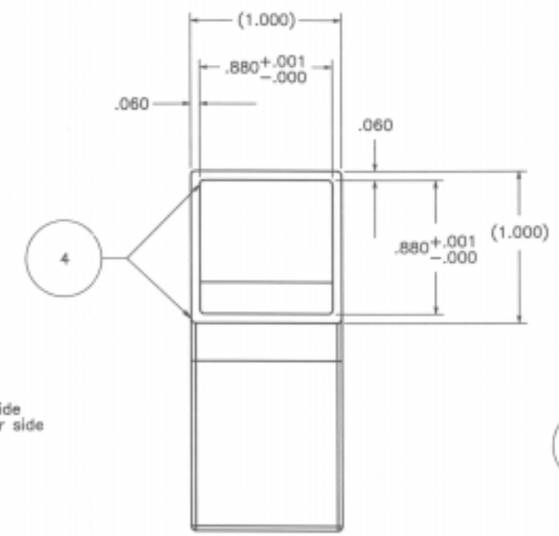

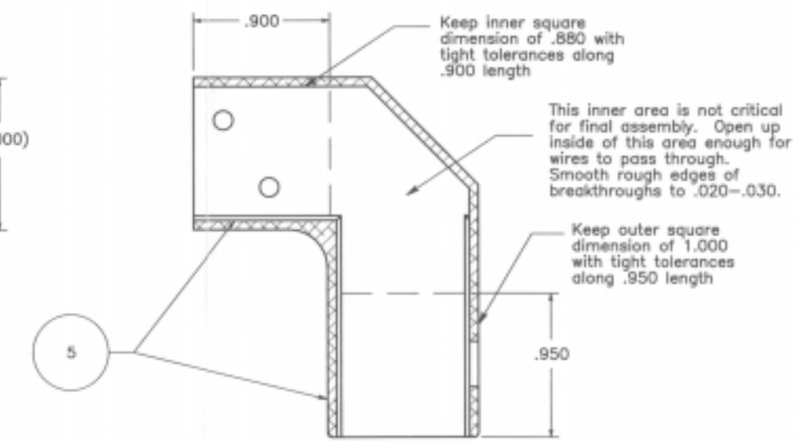

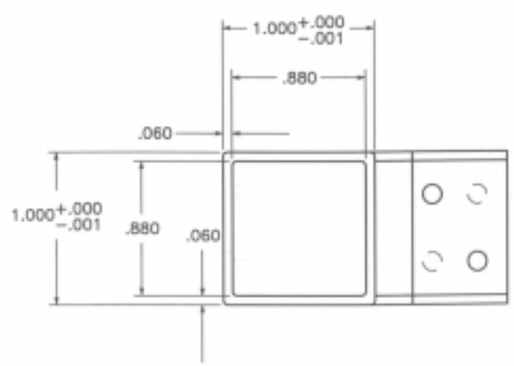

DATE 8/25/98			
DWG TITLE WHEEL STRUT LOWER BEND			
SUBSYSTEM Wheel Strut Assembly			SYSTEM Mobility Subsystem
ENGINEER Lisa Reid		SECTION 352	PHONE 4–4796
SIZE B	PROJECT ET Rover		DWG NO. 4301
SCALE 1:1	MATERIAL AL 7075–T7	QUANTITY 15	SHEET 1 of 1